FORM 31021

AMERICAN AIRLINES

MAINTENANCE AND ENGINEERING CENTER - TULSA, OKLAHOMA

TRAINING & DEVELOPMENT BRANCH

INSTRUCTION SHEETS

COURSE

CV-990 Gnd. Handling & Servicing

9/28/60

These Instruction Sheets are provided for study and use with this course only. Refer to the appropriate manuals for the latest official instructions.

Some of the illustrations in this booklet are copies of training aids the Instructor will use. Text sheets cover much of what the Instructor will explain and demonstrate. Brief notes can be made on these sheets, exactly where they apply. Other notes should be made in a personal note book as necessary.

GENERAL DESCRIPTION

The Convair 990 is 139 ft. in length, has a 120 ft. wing span and measures 39 ft. to the top of the vertical stabilizer. As a comparison the Boeing 707-123B is 144 ft. in length, has a wing span of 130 ft. and is 41 feet to the top of the vertical stabilizer. The 990 has a planned gross weight of 240,000 lbs., as compared to 258,000 lbs. of the Astrojet 707. The 990 leading edge sweepback is 39 degrees as compared to 41 degrees of sweepback (leading edge "Glove" section) on the Astrojet 707. Both airplanes have 7 degrees of dihedral in the wings. The 990's design maximum cruise speed is .91 Mach, as compared to .90 Mach of the 707. Normal fuselage compartments are provided, consisting of a cockpit, cabin and lounge, two dual buffet areas, a lower electronics compartment below the cockpit, a forward baggage compartment and a rear baggage compartment beneath the cabin floor. All doors and windows on the airplane are of the type which seal themselves against the frame when the airplane is pressurized.

STRUCTURES

Standard circumferential (circular) frames, stringers, floor tie beams and roll tapered skin have been used in the fuselage. Three production breaks are made when constructing the fuselage. In other words, the fuselage is made up in three large sections, consisting of the area forward of the wing, the center section, and the aft of the wing. These three sections are fastened together in the factory by using large overhead cranes to move section against section, followed by a bolting and riveting process which every crew member and passenger alike should be allowed to witness. Wing construction is basically the "box beam" or "bridge" structure, utilizing stressed or "ribbed" skin, which has been roll tapered from approximately an eighth of an inch in thickness up to almost one quarter of an inch thick; the thickest part being in the area around the main gear and fuselage. The alloys used on this airplane are the same proved compositions (2024, 7075, 7079, etc.) that have been used on airplanes in the past. The wings are of three spar construction, with a fourth spar or "landing gear beam", which is provided for attaching the rear fittings of the main gear.

Standard box beam rib and spar construction, combined with rib stressed skin, is used from wing tip to wing tip. Each wing is made separately, taken into the assembly line and joined to the other wing through the center section of the fuselage, making essentially a single wing which adds much to the strength of the entire structure. After the wing is fastened to the fuselage, the center section, with wings attached, moves on up the assembly line to have the forward and rear sections of the fuselage attached. After the forward and rear sections have been joined to the center section, a heavy "keel beam", which has been milled at the Convair plant, is placed externally on the bottom of the fuselage, acting as a tie member along the greater portion of the fuselage length. This keel beam takes on the appearance of a huge skid or runner in the shape of a "T". By placing this beam externally, it serves 2 purposes: one, it has not been necessary to weaken any circumferential frame by notching it, to run the keel beam through, and two, it serves as an external protective skid. This milled "T" keel beam is nearly three-fourths of an inch thick, milled from solid 7178 and 7075 stock. As the aircraft moves on up the assembly line the main gear, flaps, tail sections and controls are attached. After this the airplane is rolled out on the ramp, to go from station to station in further assembly line fashion, having the interior and exterior completed by the time it reaches the last station on the ramp assembly line.

Exhaustive structural tests have been made on the fuselage and wing structure to ascertain their yield points. The fuselage has been given a "submerged tank" test, having been "cycled" through a simulated 20 years of service at maximum differential pressures, without showing any signs of weaking. The wings were subjected to bending tests which caused a maximum of 5'10" deflection at the tips, simulating an equivalent of a 2-1/2 "G" load. From a standpoint of pure strength, the Convair 990 is probably the most strongly built airplane that American has ever purchased.

POWER PLANT

The power plant of the Convair 990 is designated the General Electric CJ 805-23 Aft Fan Turbo Jet Engine. The engine weighs 4300 lbs., it is 12 ft., 4 inches long, and has a fan inlet diameter of 53 inches. The standard day, sea level rating of this engine is 16,000 lbs. thrust. No water injection is installed on the engine. All this means that this is a conventional jet engine which takes in a massive amount of air at the front, compresses it to a ratio of 12.5 to 1, mixes the air with kerosene in the combustion chambers, lights the mixture to cause a roaring fire, which exhausts out the tail pipe. In order to compress the air taken in the front of the engine, some means of turning, a compressor must be provided. Therefore, a set of turbine wheels, mounted in the exhaust gas stream, drives the compressor through a central shaft. Essentially, a jet engine is a huge air pump; the more air moved, the more thrust gained. In order to increase the amount of air moved by this engine, the "fan" principle has been utilized in addition to the pure jet principle. In the exhaust stream, behind the turbine which drives the compressor, is mounted another rotor, which is also driven by exhaust gases, but is not mechanically connected to the turbine or compressor shaft. This aft rotor has extended blades. The inner portion of these blades is mounted in such a position as to pick up exhaust gas as a driving force, while the outer portion of the blades extends into another duct outside of the tailpipe. The outside blades draw air through a separate ducting around the outside of the engine, acting as a propeller for this air. This fan moves almost twice the amount of air as the basic jet engine, therefore it produces a vast amount of extra thrust at a substantial fuel saving. For those who are familiar with the basic jet engine used on the earlier Boeings, and the basic jet principle used on the turbo-prop engine installed on the Electra, it can be seen that this engine does not differ in the basic jet engine principle. For those who are acquainted with the "front fan" Pratt and Whitney engine now used on all our Astrojet 707s, you will recognize the same principle of moving a large amount of extra air with the fan. However, you will remember that on the Boeing fan engine the fan is mounted forward on the engine, and is mechanically fastened to the front compressor. On the GE engine the fan is "free floating" - not connected to the compressor or turbine in any way. On the GE engine a single compressor is used to compress the air flowing through the engine, not in two stages as the "N1 and N2" compressor on the Boeing. Only one tachometer for the engine compressor RPM is provided. The aft fan is also provided with a tachometer which is presented as "aft fan RPM" on the instrument panel.

Variable position stators in the compressor section of the 990 engine automatically position themselves to keep the compressor from "stalling" during rapid accelerations. This is accomplished by using fuel pressure from the fuel control unit, acting as a hydraulic fluid on actuator pistons, which move the stators to the angle required to keep the air flowing smoothly through the engine. You will recall that on the Allison engine, installed on the Electra, and the Pratt and Whitney engine, used on the Boeing that a compressor stall is prevented by opening "bleed" valves along the side of the compressor to release air pressure at certain stages of acceleration and deceleration. No such bleed valves are installed on the GE 805-23 engine.

Normal engine accessories are installed on the GE engine, mounted on the accessory sections at the bottom of the compressor section. These units consist of an air driven starter, an engine driven oil pump, a fuel control unit, a fuel pump, a 40 KVA General Electric AC Generator with a GE Constant Speed Drive, an engine driven hydraulic pump, an engine tachometer generator, oil scavenge pumps, and a thrust reverser oil pump. Two clamshell reverser doors are placed in such a position as to reverse the main jet exhaust from the engine and also the aft fan air exhaust. These doors are actuated by oil pressure which is supplied by the engine driven thrust reverser pump instead of by air pressure, as on the Boeing.

"Bleed" air from the 17th stage of the engine compressor is used for various functions on the 990. This air flow is controlled by a bleed valve mounted on the top of the engine which is in turn controlled by a switch in the cockpit. Bleed air is used for engine and wing anti-icing, turbocompressor (cabin supercharger) drive, alternate cabin pressurization, engine starting, and windshield rain removal. (No windshield wipers are installed.)

OIL SYSTEM

The oil system of the GE engine is conventional, in that an oil tank is mounted on the side of the engine which supplies oil to the engine driven oil pump for engine lubrication. One additional feature has been added to this oil system. The oil tank has been divided into two sections, the rear section providing engine oil and the forward section of the tank providing the engine driven constant speed drive and the thrust reverser pump with oil. Normally the oil in these two sections of the tank does not mix.

STARTING

Engine starting is accomplished by using a high volume of low pressure (40 to 50 psi) air to drive an air starter on the engine. This air may be supplied by a ground starting unit connected inboard of the #3 engine, or by bleed air from another engine which has already been started, through the aircraft cross-ship manifold. No start air bottle compressors or start air bottles are installed on the 990 as on the 707 or Electra.

ENGINE CONTROLS

Normal engine controls are provided in the cockpit, consisting of a single set of throttles, reverse levers and fuel cut off levers, mounted in the same configuration as the engine controls on the Boeing. On the Pilot's overhead panel are mounted the engine bleed valve switches, similar to the Boeing, which should be easily recognized by Boeing qualified crewmen.

ANTI-ICING

Anti-Icing of the Convair 990 is accomplished by using 17th stage "bleed" air from the engine compressor. This air is routed through a cross-ship manifold to the anti-ice valves in the leading edge sections of the wings, which are turned on with a set of leading edge anti-ice switches on the Pilot's overhead panel. Tail anti-icing is provided by electrical heater elements in the leading edges of the horizontal and vertical stabilizers. A tail anti-ice switch on the Pilot's overhead panel turns on this heat in flight. These methods of anti-icing the Convair 990 are exactly the same as used on the Boeing 707. On the Lockheed Electra you will remember

that all of the leading edge surfaces of the wings and tail are anti-iced by the use of bleed air from the engines. Windshield heat is provided by running electrical current through a conductive coating between the windshield panels. This method has been used on the Convair 240, the Electra and the Boeing 707. Engine intake anti-ice protection is accomplished by using a combination of engine bleed air directly from the 17th stage of the engine and bleed air from the airplane cross-ship manifold at the same time.

AUTOPILOT AND FLIGHT DIRECTOR

The Autopilot and Flight Director system used on the 990 will at first glance look very familiar to the Boeing or Electra qualified crew member. The Convair 990 has a Sperry Flight Director and Autopilot system, instead of the Bendix system which is installed on our present Boeings and Electras. The functions and appearance of the Autopilot and Flight Director system on the 990 will be almost the same as the Boeing and Electra, with minor differences only. Any crew member qualified on our present equipment should be able to operate the 990 Flight Director and Autopilot without any difficulty after an initial introduction to the panels. The signal sources and circuitry of the two systems are quite different but the same results are achieved from an operational point of view. A "Yaw Damper" feature is provided, which allows the autopilot to control the rudder only, while the aircraft is being flown by the pilot, as on the Boeing 707.

ELECTRICAL

The electrical system of the Convair 990 seems to combine the best features of the Electra and Boeing electrical systems. As on the Boeing, four engine driven 40 KVA AC generators provide electrical power for the airplane. Each generator provides its own load bus with power separately or all four generators may be "tied" together on a synchronizing bus, much the same as the Boeing, so that all generators are sharing the total load. If a generator fails, it may be turned off and its load bus powered from the remaining generators. A manual switching arrangement is provided to direct the generator output where it is desired. DC power is provided by four transformer rectifier units which function the same as on the Boeing and Electra to furnish 28V DC power to the units that need this power. A 24 volt battery is also provided in the DC system.

FIRE DETECTION AND PROTECTION

Fire detection and protection is provided for all four engines by a continuous loop fire detection circuit and fire extinguishers, mounted in the engine pylons. Emergency fire "T" handles, installed above the Pilot's center instrument panel, shut off fluids to the engine, and a "High Rate Discharge" (HRD) fire extinguisher bottle, located in each engine nacelle pylon, provides engine fire protection. "Fire" lights mounted in the fire "T" handles and an audible fire bell notify the crew of a fire condition. A "two shot" system is provided, that is, both fire extinguisher bottles on one side of the aircraft may be used for either engine on that side of the aircraft, in the same manner as the Boeing and Electra systems. Fire detection is also provided for either wheel well area, which turns on a fire light and rings the fire bell in the cockpit. The cabin and cockpit are provided with conventional CO-2 and water fire extinguishers. The oxygen starvation principle is used for an underfloor compartment fire condition. Boeing, Electra and piston qualified personnal will recognize the Convair 990 fire detection and protection system as being conventional in its system arrangement and operational use.

FLIGHT CONTROLS

The flight control arrangement of the Convair 990 is very similar to the system used on the Boeing 707, in that spoilers and ailerons are used for lateral control, operated by the aileron wheels. Elevators and an adjustable horizontal stabilizer are used for pitch. A hydraulically boosted rudder is used for yaw control. The spoilers provide 80 per cent of the lateral control while a single aileron on each wing (no inboard and outboard ailerons as on the Boeing) provides 20 per cent of the lateral control. No elevator trim wheels are provided, since pitch trim is accomplished by changing the angle of attack of the horizontal stabilizer. The horizontal stabilizer is normally adjusted by a "beep" or "pickle" switch on either aileron control wheel. Three alternate methods of stabilizer adjustment are provided which are: by moving either of two handles, mounted on the pedestal, by the auto pilot auto trim circuit, or by the speed stability (mach trim) circuit. All of these methods operate a hydraulic control valve in the tail of the airplane which in turn allows a hydraulic motor to drive a "jack screw" on the leading edge of the horizontal stabilizer. An emergency electric motor is also mounted on the jack screw, which may be operated by a switch on the pedestal, in case of a number 1 hydraulic system failure. An additional mechanical method of adjusting the horizontal stabilizer is provided by inserting a crank in the drive receptacle in the left aft lavatory. An interphone is provided at this station in order that coordination may be accomplished between the crank operator and the pilot. Rudder boost is provided by four cylinders attached to the rudder which receive hydraulic pressure from the aircraft systems. Two of these cylinders receive their pressure from the number one hydraulic system while the other two cylinders get their pressure from the number two system. A single hydraulic system failure will not cause a rudder boost failure. If a total hydraulic system failure should occur, the rudder may be controlled mechanically by using the rudder pedals to operate a servo tab, mounted on the rudder. Conventional trim tabs and indicators are provided for the rudder and ailerons. A longitudinal trim gauge is provided on the center instrument panel, to indicate the position of the horizontal stabilizer. Spoilers may be actuated by a "Speed Brake-Spoiler" handle mounted on the left side of the pedestal, in the same relative position that it is mounted on the Boeing. The spoilers may be used as speed brakes or may be used in pairs to effect the pitch of the aircraft in case of a jammed stabilizer condition in exactly the same manner as the Boeing 707.

FUEL

The total fuel capacity of the Convair 990 is 15,108 gallons, or 101,224 lbs. This fuel is carried in a five tank system which consists of: number one, number two, auxiliary center section, number three and number four tanks. Each wing tank system consists of a main compartment, a replenish compartment and an antishock body compartment. The auxiliary center section tank is located under the cabin floor in the center wing area between four intermediate spars, making it a five section tank, with the sections interconnected. Bladder cells are used in the center tank. All of the wing tank system utilizes the "wet wing" feature, having all rivets and cracks sealed with a "scotch weld" process during manufacture, which has proved to be an exceptionally tight, leak proof system. Electric transfer pumps and gravity flow are used to move the fuel to a main tank hopper or well, where it is then pumped to the engine by electric boost pumps. Engine driven pumps are provided also which will keep the engines running for normal power output, even if no boost or transfer pumps are functioning.

Refueling may be accomplished through a refueling panel, mounted under each outboard wing section, or through conventional filler caps in the top of the wings. Defueling may be accomplished through the same openings that are used for under-wing refueling, by operating de-fuel valve switches on the Flight Engineer's panel, and attaching a defuel unit. Fuel dumping may be accomplished through fuel jettison nozzles, mounted in the trailing edge of the outboard antishock bodies, by turning on the jettison or scavenge pumps at the Flight Engineer's panel. When fuel is "jettisoned" the fuel is taken down to a "stand-pipe" level in the tank, which leaves the required reserve in the tank system. When fuel is "scavenged" all the fuel in the number two tank, the number three tank and auxiliary center section tank can be dumped. Fuel could be "scavenged" if a crash landing were anticipated, which would empty these tanks of fuel. The jettison pumps and scavenge pumps are driven by hydraulic pressure, and are similar in construction. The main difference between these pumps is that the "bell mouths" or their fuel intake ports are located at the desired level in the tank to accomplish their purpose. No actual stand pipes are mounted in the tanks. Tank and pump arrangement in the 990 differs considerably from the Boeing and Electra. Once the fuel is picked up by the electric boost pumps in the tank the flow of fuel through the tank shut off valve, the emergency shut off valve, the engine driven fuel pump, the fuel control unit and the fuel flow transmitter to the engine is conventional.

AIR CONDITIONING

Two turbocompressors (TCs) are installed in the bottom of the fuselage, under the wing, which provide the primary source of air for pressurization and air conditioning. Air temperature is effected by the heat of compression through the turbo compressors, electric heater elements installed in the air conditioning ducts, heat exchangers, and by two freon air conditioning units, also mounted in the center or "plenum" chamber, adjacent to the turbocompressors. The turbocompressors receive their "driving" air from the 17th stage of compression from the engines. Outside air is taken in through intakes under the fuselage, run through the turbocompressors to be compressed, circulated across the heat exchangers and freon evaporators for cooling, and then directed into the cabin or cockpit. Boeing qualified crew members will recognize this as practically the same process of air conditioning used on the Boeing 707, except that on the Boeing the TC's are mounted on the number two and three engines. On the Electra air is provided by the engine driven compressor (EDC) and follows generally the same process for conditioning. However, on the Electra two expansion cooling turbines or air cycle machines are furnished in the system also. The 990 and 707 do not have cooling turbines installed, but utilize two large freon units to cool the air. If a turbo compressor becomes inoperative on the 990, an alternate air valve may be opened which will allow 17th stage compressor air to enter the cabin. This air will take the same route across the heat exchanger and freon evaporator that the turbocompressor air would take. Therefore, it is subject to the same temperature adjustments. Two automatic temperature rheostats are provided on the Flight Engineer's panel. One rheostat controls the Flight Deck temperature while the other controls the temperature of the cabin. If the automatic feature fails to function properly, a manual switch arrangement allows the temperature of the cabin or the cockpit to be adjusted manually.

PRESSURIZATION

Pressurisation is provided by turbocompressor air or by alternate cabin air, supplied directly from the engines as mentioned above. Two outflow valves are mounted on the

bottom of the fuselage, one forward and one aft, which are controlled pneumatically by a pressure controller on the Flight Engineer's panel. If the pneumatic controller fails to operate, an electric motor drive is provided which may be used to open or close the outflow valve. A normal maximum cabin pressure of 8.3 psi may be maintained which will provide a cabin altitude of sea level to an airplane altitude of 21,000 ft. The outflow valves have a 'relief' feature which starts to open them automatically if pressure reaches 8.6 psi. Cabin differential pressure, cabin altitude and cabin rate of climb instruments are provided. Boeing qualified personnel will recognize the automatic cabin controller as being the same instrument that is installed in the Boeing. Electra crew members will notice that the two electric motor drive toggle switches for the outflow valves are similar to the single electric drive toggle switch on the Electra.

HYDRAULIC SYSTEM

Hydraulic pressure is used on the Convair 990 to operate the landing gear and flaps, the wing spoilers, the leading edge flaps and slats, the horizontal stabilizer, nose wheel steering, landing gear brakes, rudder boost, and some of the fuel pumps, as mentioned in the fuel section. Two independent hydraulic systems are provided. Fluid supplied by the number one system reservoir is pressurized by engine driven pumps on the number one and two engines. Similarily, fluid from the number two system reservoir is pressurized by pumps on the number three and four engines. A continuous duty auxiliary electric pump will provide pressure for both systems at once, taking its supply from the number two hydraulic system reservoir. The hydraulic system of the 990 compares to the Electra, in that there are two systems, with some units operating from the number one system, and other units operated from both systems. The 990 system compares to the Boeing, in that engine driven hydraulic pumps (which can be placed on minimum flow, or "feathered") are provided. However, on the 990, engine driven pumps are supplied on all four engines instead of just on the number two and number three engines, as on the Boeing. Some of the differences found on the 990 in the hydraulic system will be: the use of a hydraulic motor to drive the horizontal stabilizer leading edge up and down, instead of an electric motor as on the Boeing, hydraulic motors which are used to drive the jettison and scavenge fuel pumps, and hydraulic brakes installed on the nose gear, in addition to brakes on the main gear. The nose gear brakes will only work if the anti-skid system is on and working, and then only if the brake pedals are depressed nearly all the way to the limit. The anti-skid system on the 990 compares to the Boeing system in that a possible skid condition is detected and hydraulic pressure is automatically released from the wheel, preventing a blown tire, however, it should be noted that on the 990 the pilot will not "feel" the anti-skid system releasing pressure by the feel of the brake pedals as on the Boeing. Units which operate from the number one hydraulic system are: Nose wheel extension and retraction, nose wheel steering, nose wheel brakes, the number 2 and 3 scavenge pumps, the left auxiliary center section tank boost jettison pump and the horizontal stabilizer hydraulic motor. The number two system operates the main gear extension and retraction, main gear brakes, fuel jettison pumps in the number 1, 2, 3, and 4 tanks, and the right auxiliary center section boost jettison pump. Units which will operate from both systems are the leading edge flaps and slats, wing spoilers, trailing edge flaps (which are normally powered by the number one system, but may be powered by the number two system if selected) and the rudder boost. The landing gear is provided with an emergency extension lever mounted on the rear of the pedestal, which mechanically releases the main and nose gear up locks, releases pressure in the gear lines, directs air from the number two hydraulic system accumulator to the main gear door actuators to open the doors,

and allows the landing gear to "free fall" to a down and locked position. The nose gear doors are mechanically opened by the gear when it is dropped with the emergency extension lever.

Emergency air brakes are provided which are turned on with an emergency air brake handle on the center engine instrument panel.

EMERGENCY EQUIPMENT

Cockpit sliding windows, forward and aft passenger entrance doors, forward and aft galley service doors and two over-wing exits a s provided and may be used as emergency exits from the aircraft. All of the doors and windows mentioned above may be opened from inside or outside of the airplane. Escape ropes are supplied at the cockpit sliding windows and at the over-wing exits. Inflatable escape chutes are provided at each cabin passenger entrance door and at each galley service door. A CO_2 fire extinguisher, a crash axe and an emergency walk around oxygen bottle are provided in the cockpit. Three water fire extinguishers, four walk around oxygen bottles and two first aid kits are carried in the cabin. Four 111 cu. ft. oxygen bottles are mounted in a wall panel to the left of the Second Officer's station. The two forward bottles of this group serve as the cockpit oxygen supply, while the two rear bottles furnish the cabin supply system. The oxygen system may be turned on or off at the bottles. An automatic feature is provided for the cabin oxygen system, in that if a cabin altitude of 14,500 ft. is exceeded, the system is automatically pressurized with oxygen, which causes oxygen masks to fall down in front of the passengers from overhead storage containers. The 990 cabin oxygen system is very similar to the Boeing 707 in this respect. Crew members qualified on the Lockheed Electra or the Boeing 707 will notice that the oxygen regulator panels at the crew stations on the Convair 990 are exactly the same as those presently used.

ASTROJET COMPARISON CHART

PERTINENT DATA

	CONVAIR 990	BOEING 707-123B	BOEING 707-720B
MAX. T.O. WEIGHT	239,200	257,000	221,000
MAX. LANDING WEIGHT	202,000	185,000	175,000
CRUISE SPEED (At Normal Landing Weight)	508 KTS 585 MPH at 21,000'	529 KTS 608 MPH at 25,000'	531 KTS 610 MPH as 22,500'
T.O. DISTANCE (Max. Gross)	8600'	7800'	5650'
990 LANDING DISTANCE @ S/L 150,000# 4,800'	(5100' @ 185,000)		
WING LOADING (max Gross)	100 lbs.+	102 lbs.+	87 lbs.+
CREW SEATING	5	5	5
PASSENGER ARRANGEMENT	42 F/C 57 A/T 4 Lounge	40 F/C 80 A/T	36 F/C 68 A/T
TOTAL PASSENGERS (Summer)	103	120	104

DIMENSIONS

FUSELAGE LENGTH	134'9"	138'10"	130'6"
OVERALL LENGTH	139'3"	144'6"	136'9"
FUSELAGE HEIGHT	12'5"	14'2-1/2"	14'2-1/2"
FUSELAGE WIDTH	11'6"	12'4"	12'4"
WING SPAN	120'	130'10	130'10"
WING SWEEPBACK @ 25% MAC	35°	35°	35°
HORIZONTAL STABILIZER SPAN	38'9"	43'	43'
FIN HEIGHT	39'4"	41'5"	40'11"
LANDING GEAR WIDTH	19'11"	22'1"	21'11"

ELECTRICAL POWER

	CONVAIR 990	BOEING 707-123B	BOEING 707-720B
GENERATOR TYPE	Slip Ring	Brushless	Brushless
MANUFACTURER	General Electric	Westinghouse	Westinghouse
OUTPUT (Single ϕ voltage) / (ϕ to ϕ voltage)	115/200V AC 3ϕ 400 ~	115/200V AC 3ϕ 400 ~	115/200V AC 3ϕ 400 ~
CAPACITY (per generator)	40 KVA	40 KVA	40 KVA
GENERATOR DRIVE (CSD)	General Electric	Sundstrand	Sundstrand
GROUND POWER REQUIREMENTS	125 KVA	125 KVA	125 KVA

PRESSURIZATION & AIR CONDITIONING

NORM. MAX. PRESSURE DIFFERENTIAL	8.3 PSI	8.6 PSI	8.6 PSI
TURBOCOMPRESSORS	2 Each	2 Each	2 Each
MANUFACTURER	Hamilton Standard	AiResearch	AiResearch
LOCATION	Under Wing Center Section	Top of 2, 3 Engine	Top of 2, 3 Engine
ALTERNATE PRESSURE SOURCE	4 Engine Bleeds	4 Engine Bleeds	4 Engine Bleeds
AIR CONDITIONING PACK	Vapor Cycle	Vapor Cycle	Vapor Cycle
MANUFACTURER	Hamilton Standard	AiResearch	AiResearch
NUMBER	2	2	2
CAPACITY	8.5 Tons Ea.	10 Tons Ea.	10 Tons Ea.
LOCATION	Under Wing Center Section	Under Wing Center Section	Under Wing Center Section

WINDOWS

	CONVAIR 990	BOEING 707-123B	BOEING 707-720B
FLIGHT DECK	Glass & Vinyl Nesa	Glass & Vinyl Nesa	Glass & Vinyl Nesa
NUMBER	7	10	10
RAIN CLEARING	Engine Bleed Air	Wipers	Wipers
ANTI-ICE	3	4	4
ANTI-FOG	7	6	6
CABIN	Dual Pane Plexiglas	Dual Pane Plexiglas	Dual Pane Plexiglas
NUMBER	96 Total 52 Left 44 Right	98 Total 53 Left 45 Right	88 Total 48 Left 40 Right
VIEWING AREA	10" x 14"	10" x 14"	10" x 14"
HOW INSTALLED	Rubber Extrusion	Clips	Clips

EQUIPMENT/FURNISHINGS

LOUNGE	Yes (4)	Yes (6)	Yes (6)
GALLEY UNITS	4	3	3
MOVABLE PARTITION	Yes	Yes	Yes
MOVABLE SEATS	Yes	Yes	Yes
DOME LIGHTS	No	Yes (5)	Yes (5)
INFLATABLE EVACUATION SLIDES	Yes (4)	Yes (4)	Yes (4)
LAVATORIES	4	4	4
SEATS	F.C.2 Abreast AT 2 Abreast-LH 3 Abreast-RH	F.C.2 Abreast AT 3 Abreast-RH 3 Abreast-LH	F.C.2 Abreast AT 3 Abreast-RH 3 Abreast-LH
FOLDABLE FOOD TRAYS	Yes	Some	Some

OXYGEN SYSTEM

	CONVAIR 990	BOEING 707-123B	BOEING 707-720B
CREW SYSTEM TYPE	High Pressure Diluter Demand	High Pressure Diluter Demand	High Pressure Diluter Demand
NO. OF BOTTLES	2, Interconnected with passenger sys.	One each	One each
BOTTLE SIZE AND CHARGE	107 or 114 cu. ft. - 1800 PSI	107 or 114 cu. ft. - 1800 PSI	107 or 114 cu. ft. - 1800 PSI
BOTTLE LOCATION	Flight Deck	Forward Drop Ceiling	Forward Drop Ceiling
PASSENGER SYSTEM TYPE	High Pressure Continuous Flow	High Pressure Continuous Flow	High Pressure Continuous Flow
AUTOMATIC	Yes	Yes	Yes
NO. OF BOTTLES	2, Interconnected with Crew System	4	4
BOTTLE SIZE & CHARGE	107 or 114 cu. ft. - 1800 PSI	107 or 114 cu. ft. - 1800 PSI	107 or 114 cu. ft. - 1800 PSI
BOTTLE LOCATION	Flight Deck	Aft Cargo Compartment	Aft Cargo Compartment

WATER/WASTE SYSTEM

TYPE	Press.	Gravity	Gravity
NO. OF TANKS	1	2	2
TANK SIZE	50 Gal.	43 Gal.	43 Gal.
LAVATORY DRAIN WATER	To Toilet Tanks	Overboard	Overboard
TANK LOCATION	Forward of Front Spar (H_2O) Compt.)	Forward and Aft Drop Ceiling	Forward and Aft Drop Ceiling
FLUSHABLE TOILETS	Yes	Yes	Yes

FUEL SYSTEM

	CONVAIR 990	BOEING 707-123B	BOEING 707-720B
CAPACITY	15,042 Gal.	15,516 Gal.	13,611 Gal.
NO. OF TANKS	4 Main 4 Replenish 4 ASB 1 Center Wing	4 Main 2 Reserve 1 Center Wing	4 Main 2 Reserve 1 Center Wing
CENTER SECTION CELLS	5	3	0
UNDER WING FUELING	Yes	Yes	Yes
INTEGRAL TANK SEALANT	Scotch Weld	PR1422-B2	PR1422-B2
FUEL DUMP	Jettison	Chute	Chute

FLIGHT CONTROLS

LEADING EDGE SLATS	Yes (8)	No	No
LEADING EDGE FLAPS	2	16	16
FILLET FLAP	No	Yes	Yes
MAIN FLAPS	4	4	4
INBOARD AILERONS	Yes	Yes	Yes
OUTBOARD AILERONS	No	Yes	Yes
SPOILERS	2 Inboard 3 Outboard	2 Inboard 2 Outboard	2 Inboard 2 Outboard
ADJUSTABLE STABILIZER	Yes	Yes	Yes
FULL POWER RUDDER	Yes	Yes	Yes

ENGINE COMPARISON

ENGINE TYPE	Aft Fan Turbo Fan	Forward Fan Turbo Fan	Forward Fan Turbo Fan
MANUFACTURER	G.E.	P&W	P&W
DESIGNATION	GJ805-23	JT3D-1, -1MC6, 7	JT3D-1, -1MC6, 7
T.O. THRUST	15,850 lbs.	17,000 lbs.	17,000 lbs.
T.S.F.C. AT T.O.	.360 pounds of fuel per pound of thrust	.520	.520

AMERICAN AIRLINES, INC.
GEN-00-002A
2-12-61

LOCKHEED ELECTRA

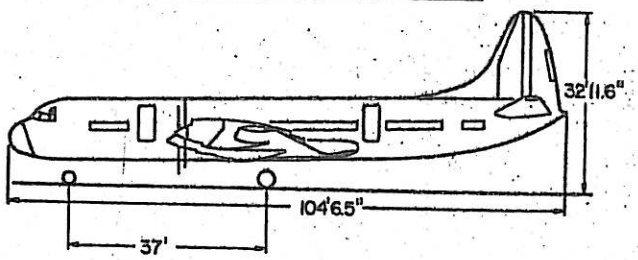

BOEING 727-23

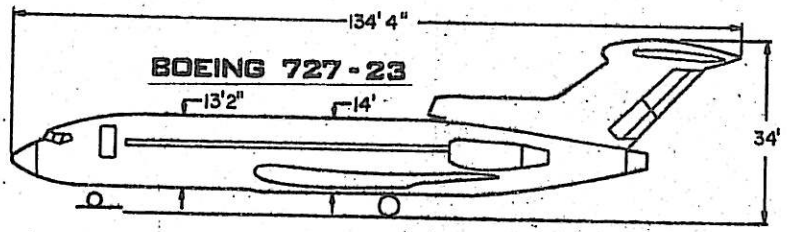

BOEING 707-123B

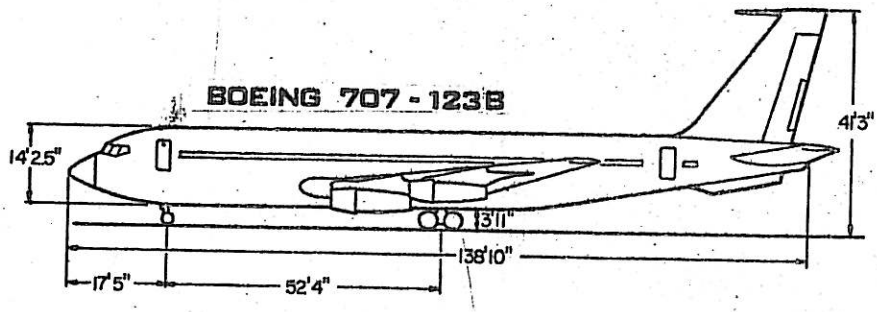

BOEING 707-720B

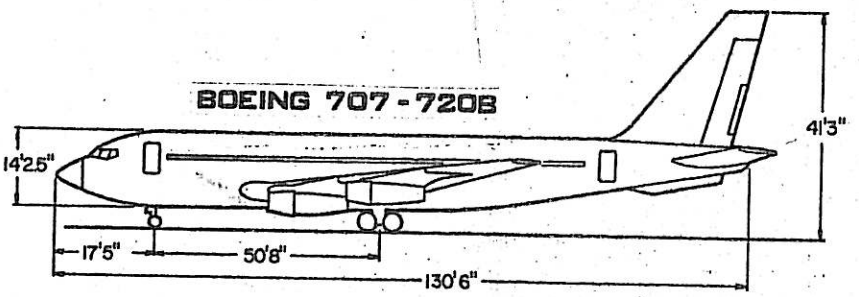

CONVAIR 990

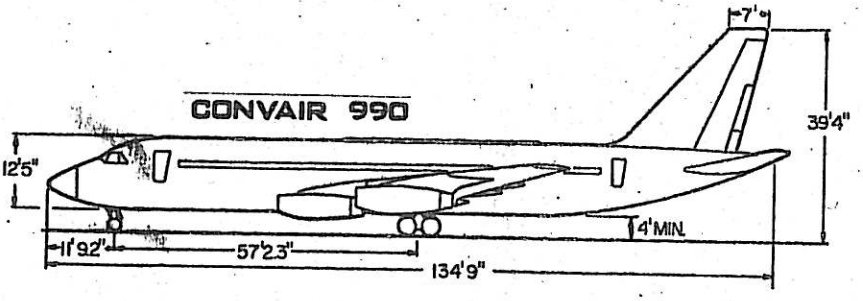

LOCKHEED ELECTRA

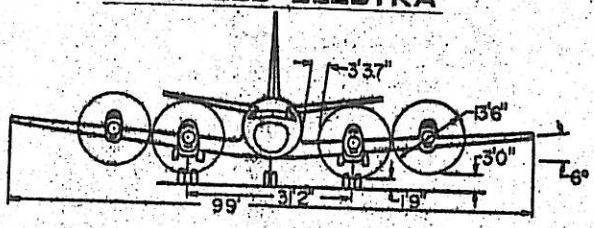

BOEING 727-23

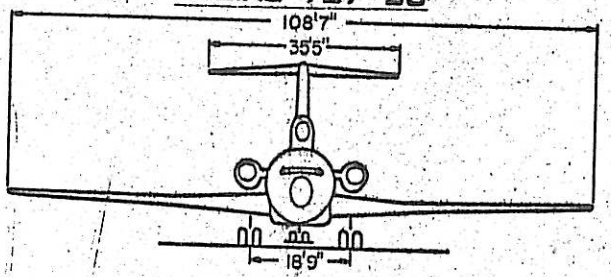

BOEING 707-123B

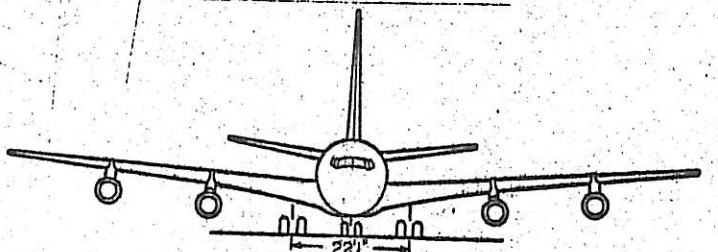

OTHER DIMENSIONS
SAME AS 720B

BOEING 707-720B

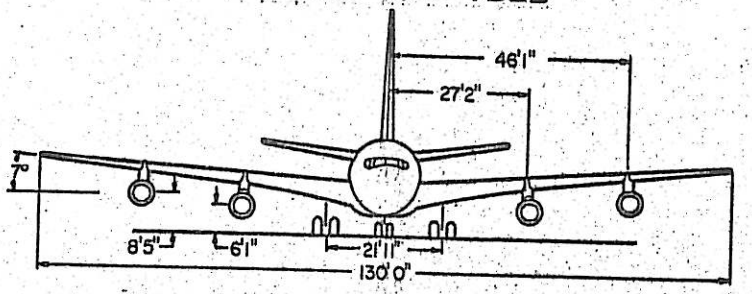

CONVAIR 990

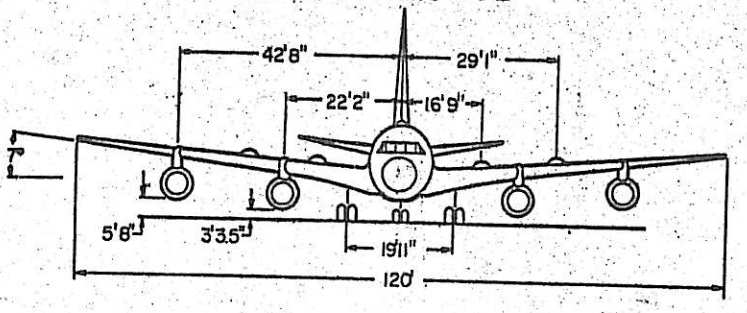

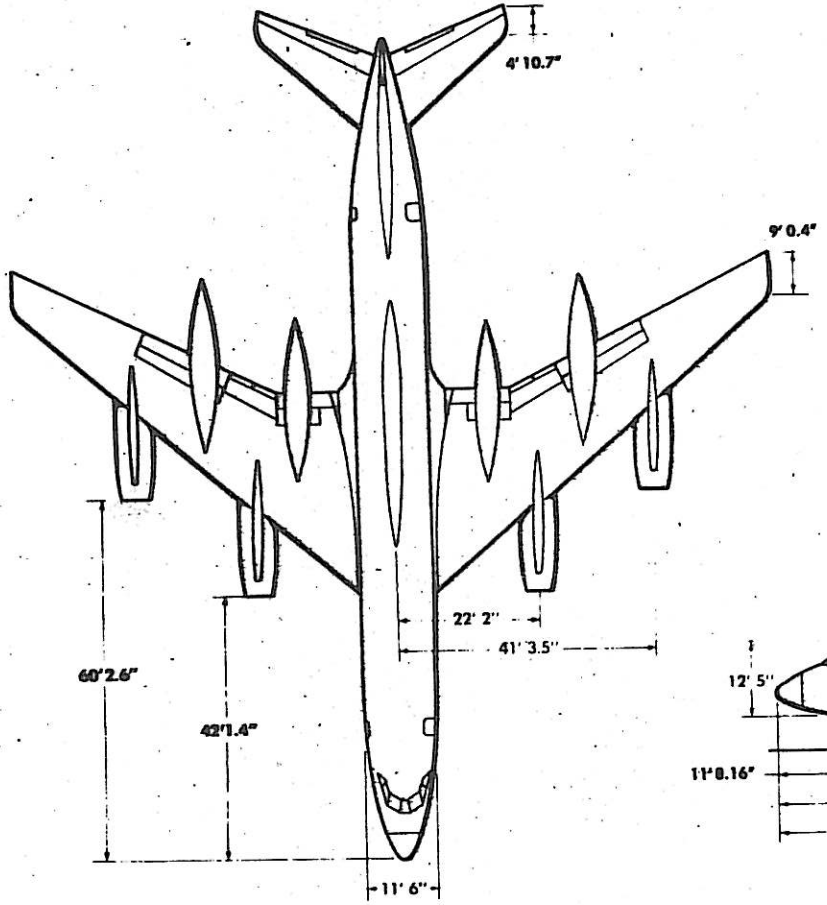

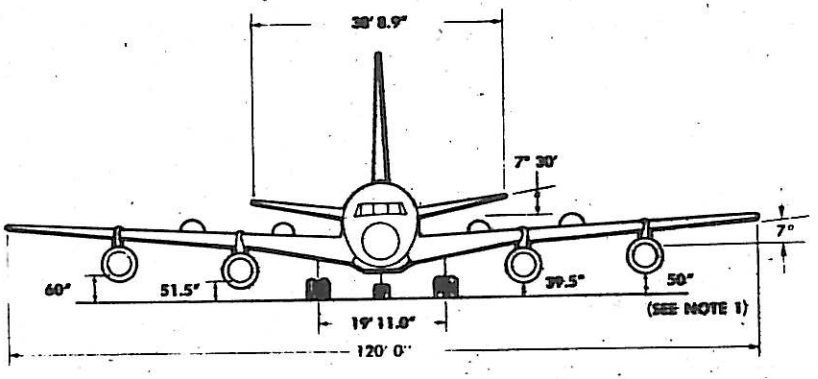

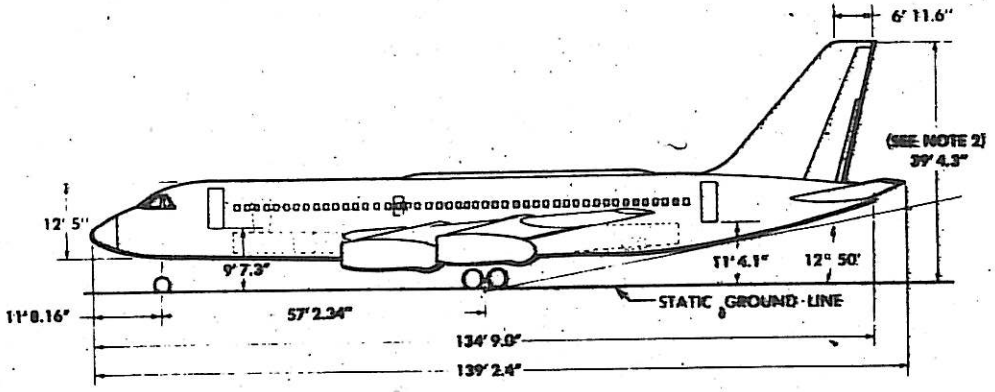

NOTE

1. ENGINE POD CLEARANCE AND AIR INTAKE HEIGHT DIMENSIONS PREVAIL ONLY DURING AIRPLANE MANUFACTURE. FULL FUEL LOADS DEPRESS INBOARD ENGINE PODS 1.5 INCHES AND OUTBOARD ENGINE PODS 8.0 INCHES.
2. VERTICAL STABILIZER HEIGHT DIMENSION SHOWN IS WITH AIRPLANE AT FULL GROSS WEIGHT. THIS HEIGHT WILL INCREASE FROM FOUR TO SIX INCHES WITH AIRPLANE AT EMPTY WEIGHT.

AMERICAN AIRLINES, INC.	
990-06-003A	
DATE 11-20-61	REFERENCE

990-07-001
DATE 9-12-64 REFERENCE 30.30.07.001

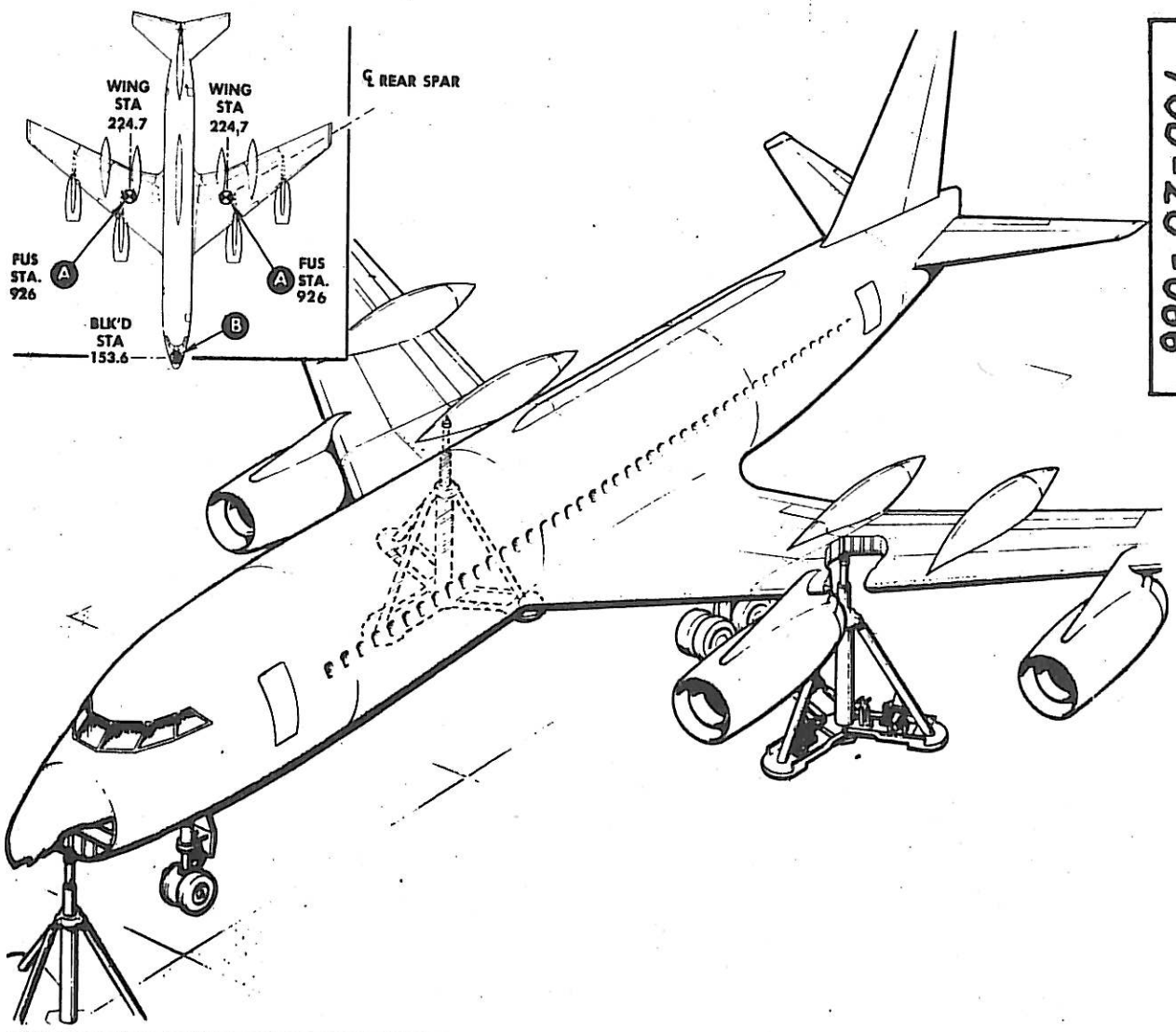

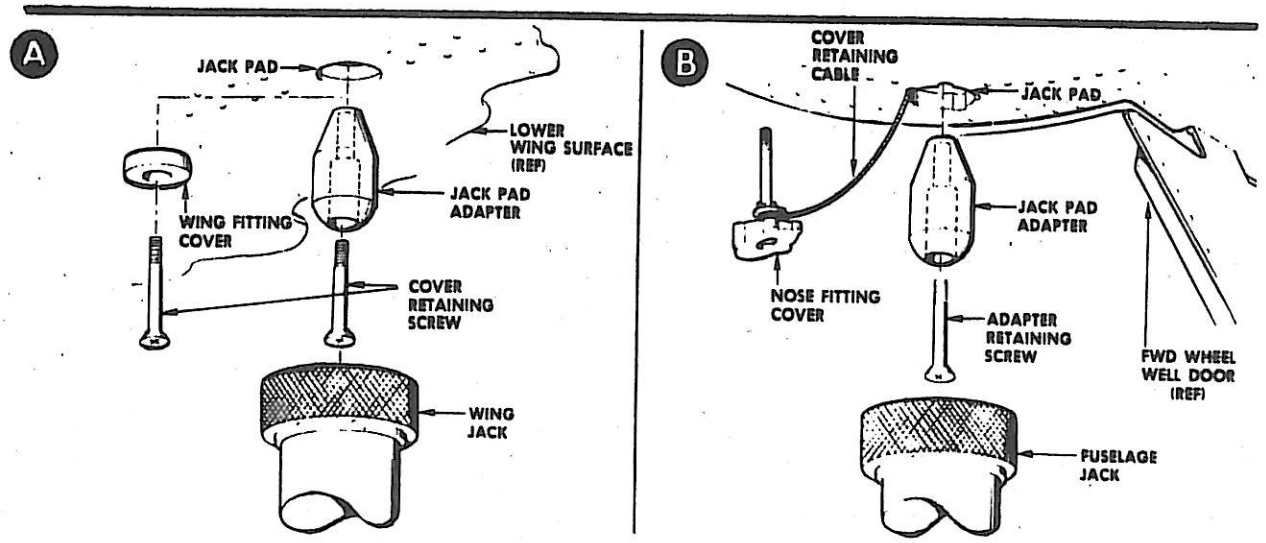

30.30.07.002B

JACK CLEARANCES, CAPACITIES, AND LOADS

LANDING GEAR JACK POINT LOCATION		CLEARANCE (INCHES)					CAPACITY (TONS)	MAXIMUM ALLOWABLE LOAD (POUNDS)
		TIRES INFLATED	2 FLAT TIRES	4 FLAT TIRES	2 WHEELS ON RIMS	4 WHEELS ON RIMS		
MAIN LANDING GEAR STRUT		13.50	11.56	9.70	8.88	4.50	60 (EACH)	116,500 (EACH)
MAIN LANDING GEAR TRUCK	FORWARD	13.62	9.82	9.82	4.62	4.62	30 (EACH)	57,500 (EACH)
	AFT	13.62	9.82	9.82	4.62	4.62	30 (EACH)	59,000 (EACH)
NOSE LANDING GEAR STRUT		14.05	11.65	—	10.35	—	15	20,700

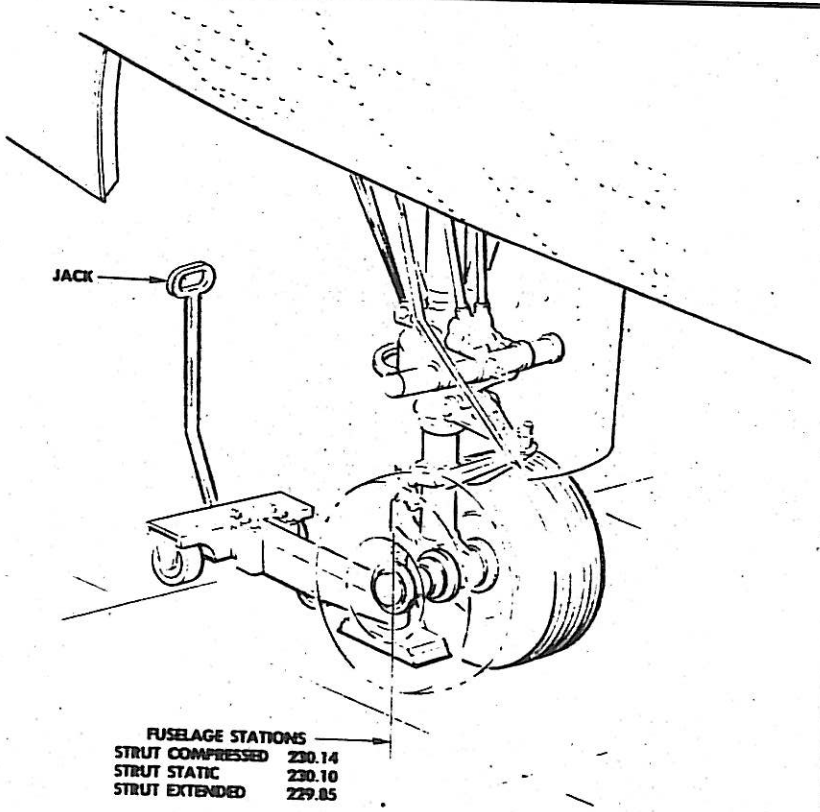

JACKING AT
NOSE LANDING GEAR

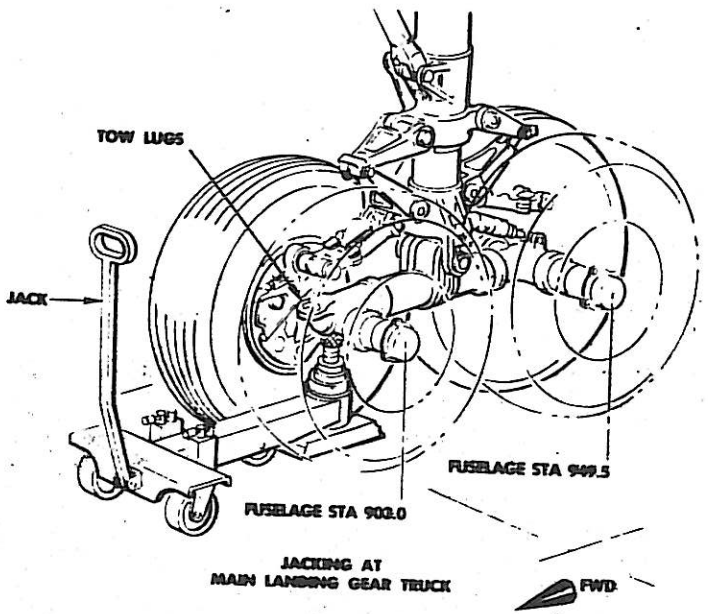

JACKING AT
MAIN LANDING GEAR TRUCK

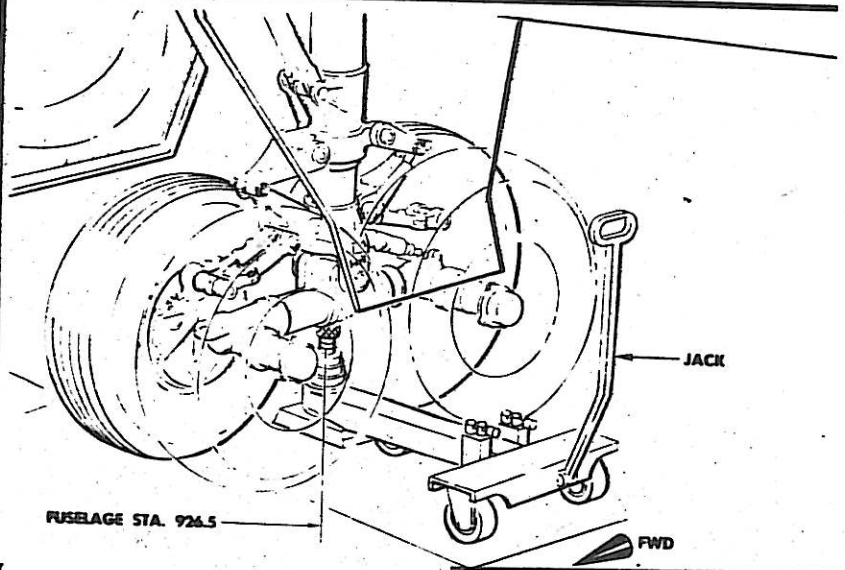

JACKING AT
MAIN LANDING GEAR STRUT

CAUTION

MAKE CERTAIN JACK IS CENTERED ON JACK PAD BEFORE LIFTING LANDING GEAR.

30.30.07.002B

AB

LANDING GEAR JACK POINTS

AMERICAN AIRLINES, INC.

990-07-002A

DATE 11-20-61

REFERENCE

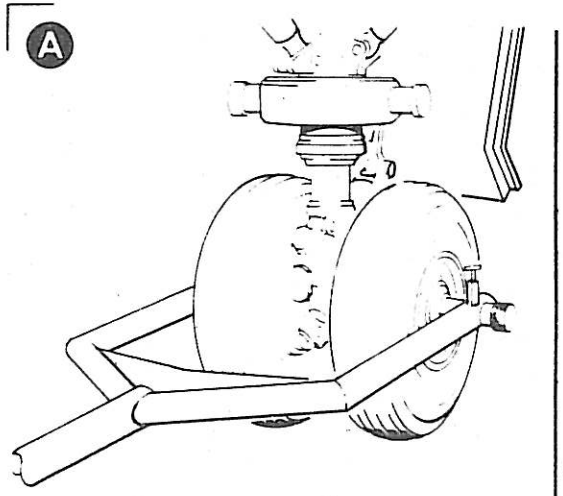

NOSE WHEEL TOW BAR

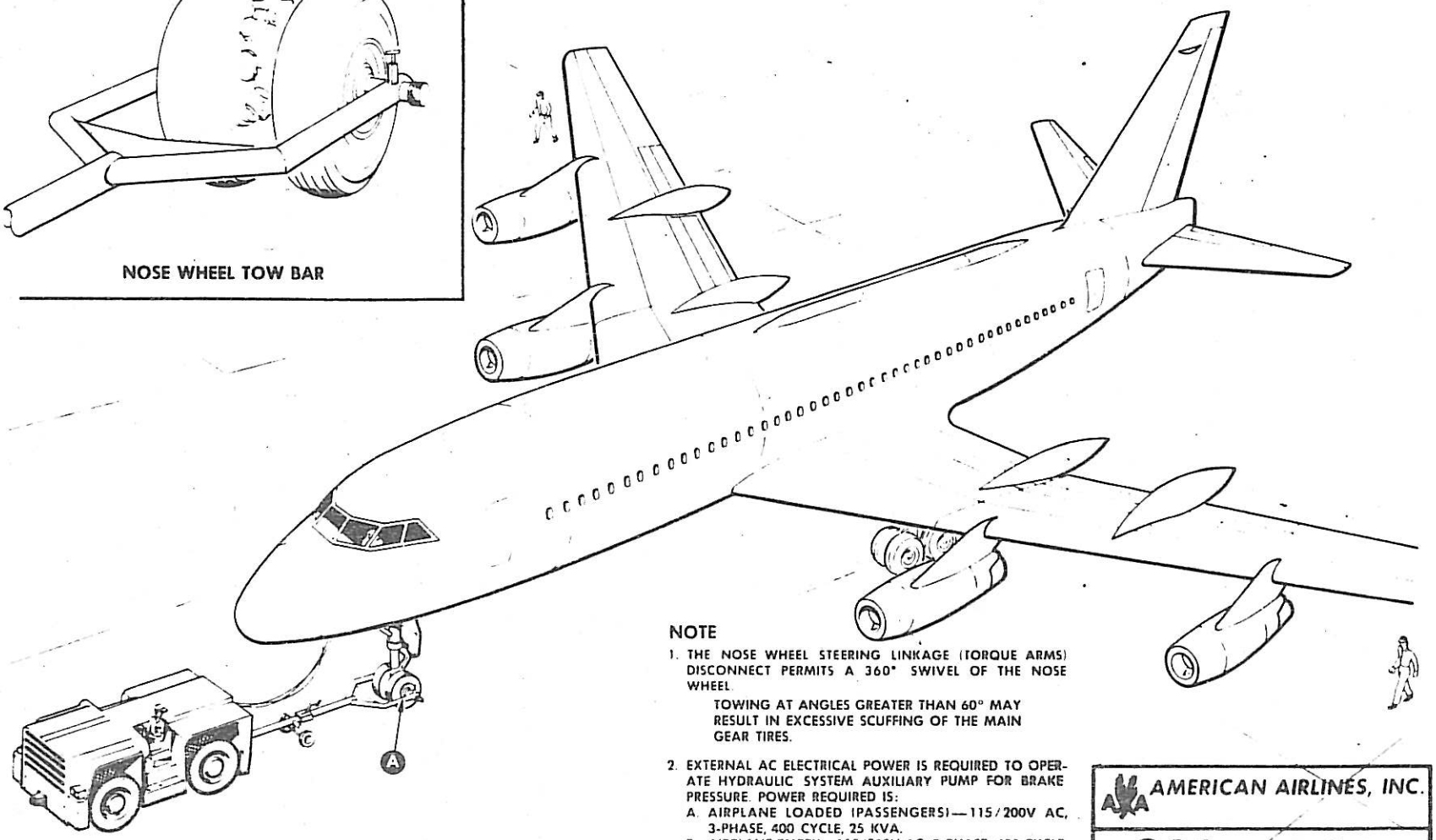

NOTE

1. THE NOSE WHEEL STEERING LINKAGE (TORQUE ARMS) DISCONNECT PERMITS A 360° SWIVEL OF THE NOSE WHEEL.

   TOWING AT ANGLES GREATER THAN 60° MAY RESULT IN EXCESSIVE SCUFFING OF THE MAIN GEAR TIRES.

2. EXTERNAL AC ELECTRICAL POWER IS REQUIRED TO OPERATE HYDRAULIC SYSTEM AUXILIARY PUMP FOR BRAKE PRESSURE. POWER REQUIRED IS:
   A. AIRPLANE LOADED (PASSENGERS)—115/200V AC, 3-PHASE, 400 CYCLE, 25 KVA.
   B. AIRPLANE EMPTY—115/200V AC, 3-PHASE, 400 CYCLE, 12 KVA.
3. TOWING SHOULD BE ACCOMPLISHED AT LOW SPEEDS ONLY.

AMERICAN AIRLINES, INC.

990-09-001

DATE	REFERENCE
9/12/60	30.30.09.001

30.30.09.001

TOWING FROM THE NOSE GEAR

30.30.09.003

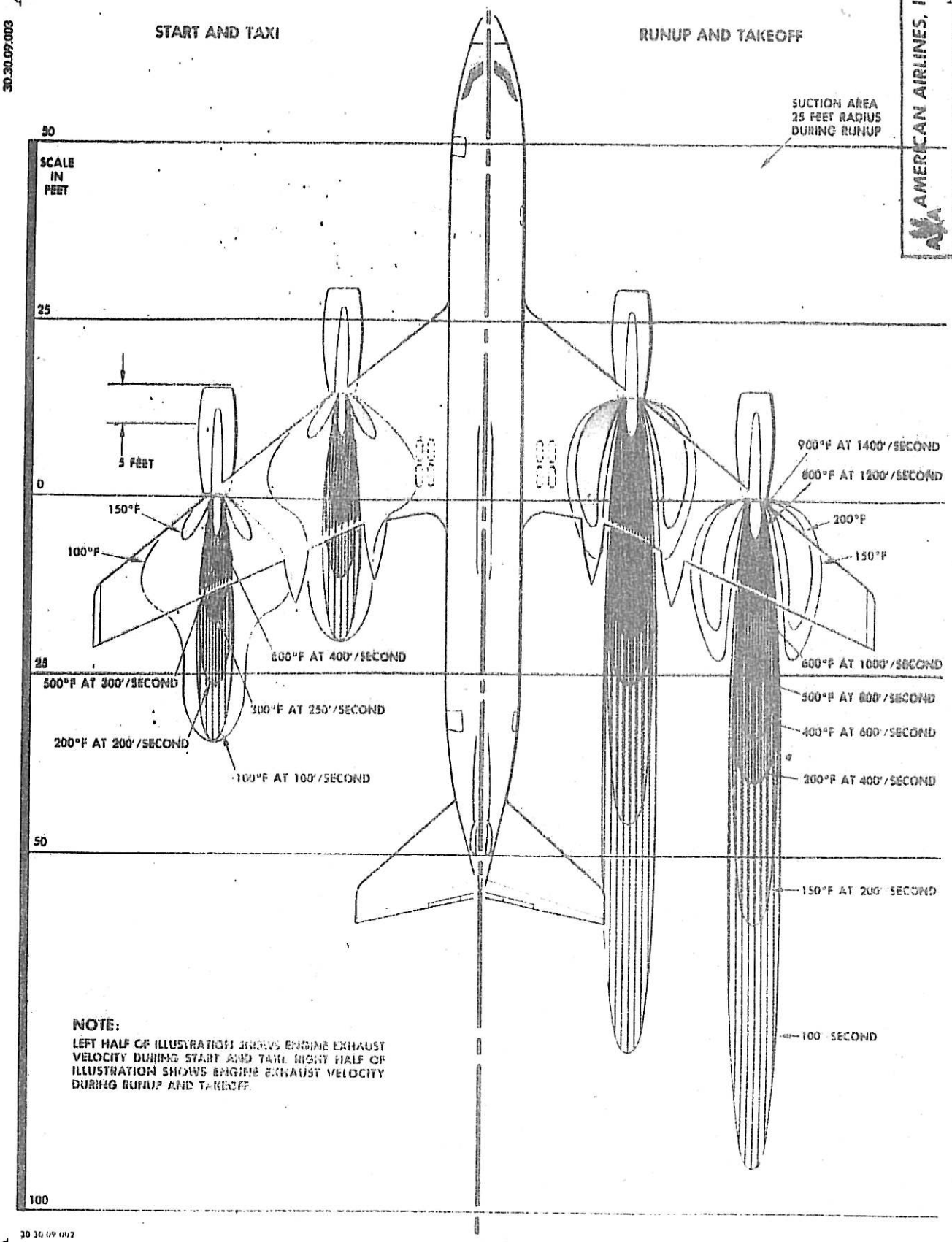

NOTE:
LEFT HALF OF ILLUSTRATION SHOWS ENGINE EXHAUST VELOCITY DURING START AND TAXI. RIGHT HALF OF ILLUSTRATION SHOWS ENGINE EXHAUST VELOCITY DURING RUNUP AND TAKEOFF.

30 30 09 002

AMERICAN AIRLINES, INC.
990-09-003
DATE 4/12/[illegible] REFERENCE 30.30.09.003

AMERICAN AIRLINES, INC.
990-10-001
DATE 9/10/60
REFERENCE 30.30.10.001

NOTES

1. ON ICE OR SNOW COVERED SURFACES, USE SAND BAGS IN LIEU OF CHOCKS.
2. ALWAYS INSTALL LANDING GEAR DOWN-LOCK SAFETY PINS AND STATIC GROUND CABLES.
3. WHEN AIRPLANE IS PARKED OVERNIGHT OR FOR AN EXTENDED PERIOD IT SHOULD BE MOORED IN ADDITION TO CHOCKING THE WHEELS.

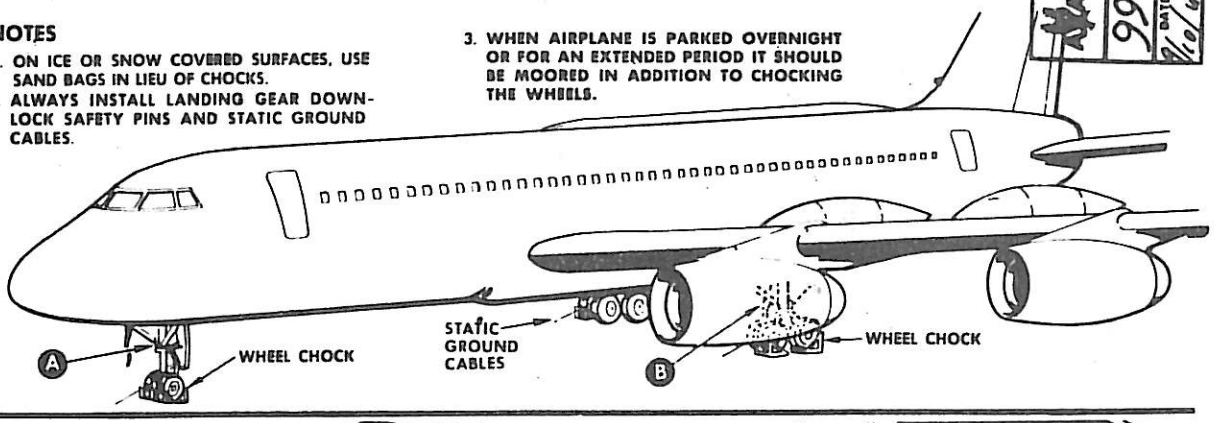

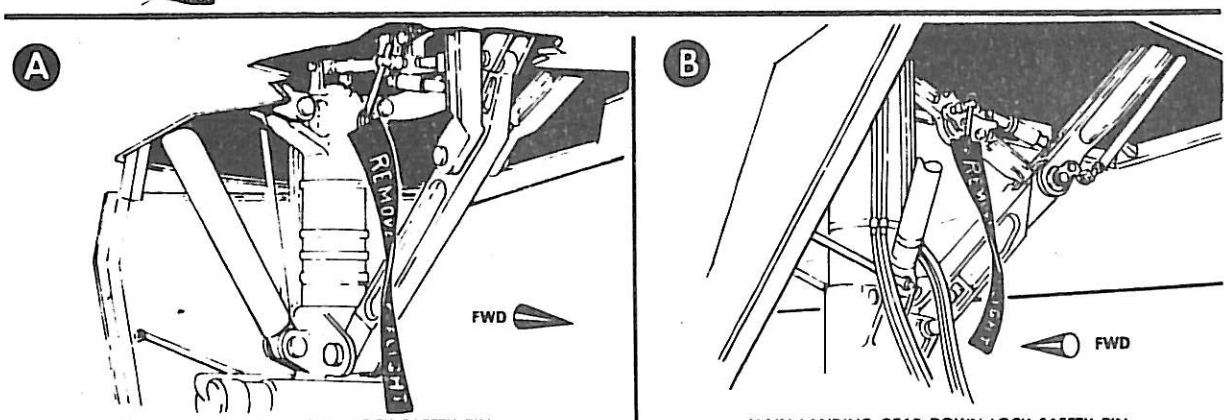

30 30 10 001

NOSE LANDING GEAR DOWN-LOCK SAFETY PIN

MAIN LANDING GEAR DOWN-LOCK SAFETY PIN

PARKING REQUIREMENTS

GENERAL - TERMINAL SERVICING DIAGRAM - TYPICAL - CONVAIR 990-30

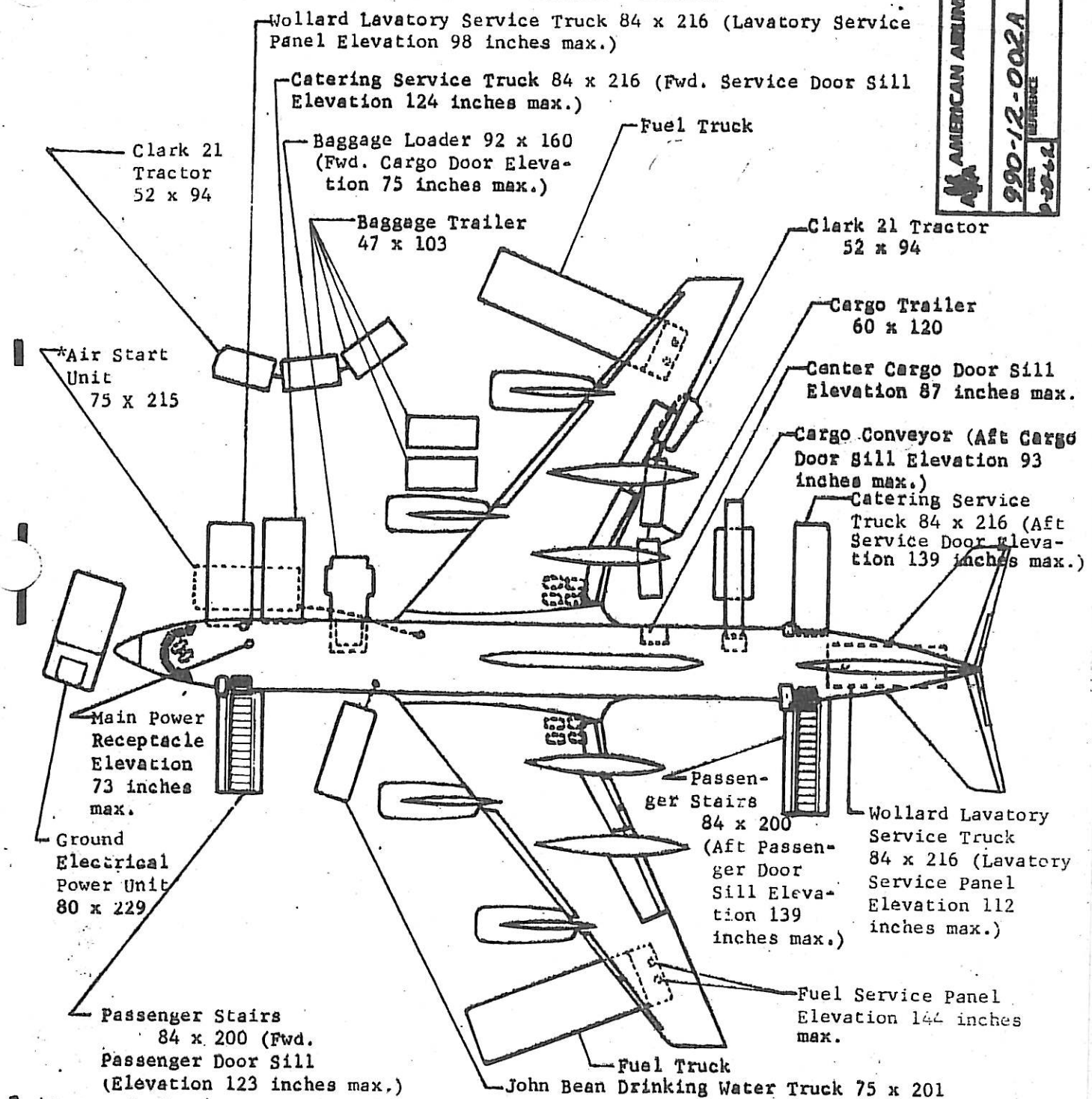

*At terminals where passenger "jet ways" are used, the air start unit may be positioned on the LH side of the fuselage, at Station option. At stations where stairs are used, air start units must be positioned on RH side of fuselage.

Terminal Servicing Diagram - Typical - Convair 990-30
Figure 1

AMERICAN AIRLINES, INC.
990-12-002A
DATE 9-28-62
REFERENCE

30.30.12.004

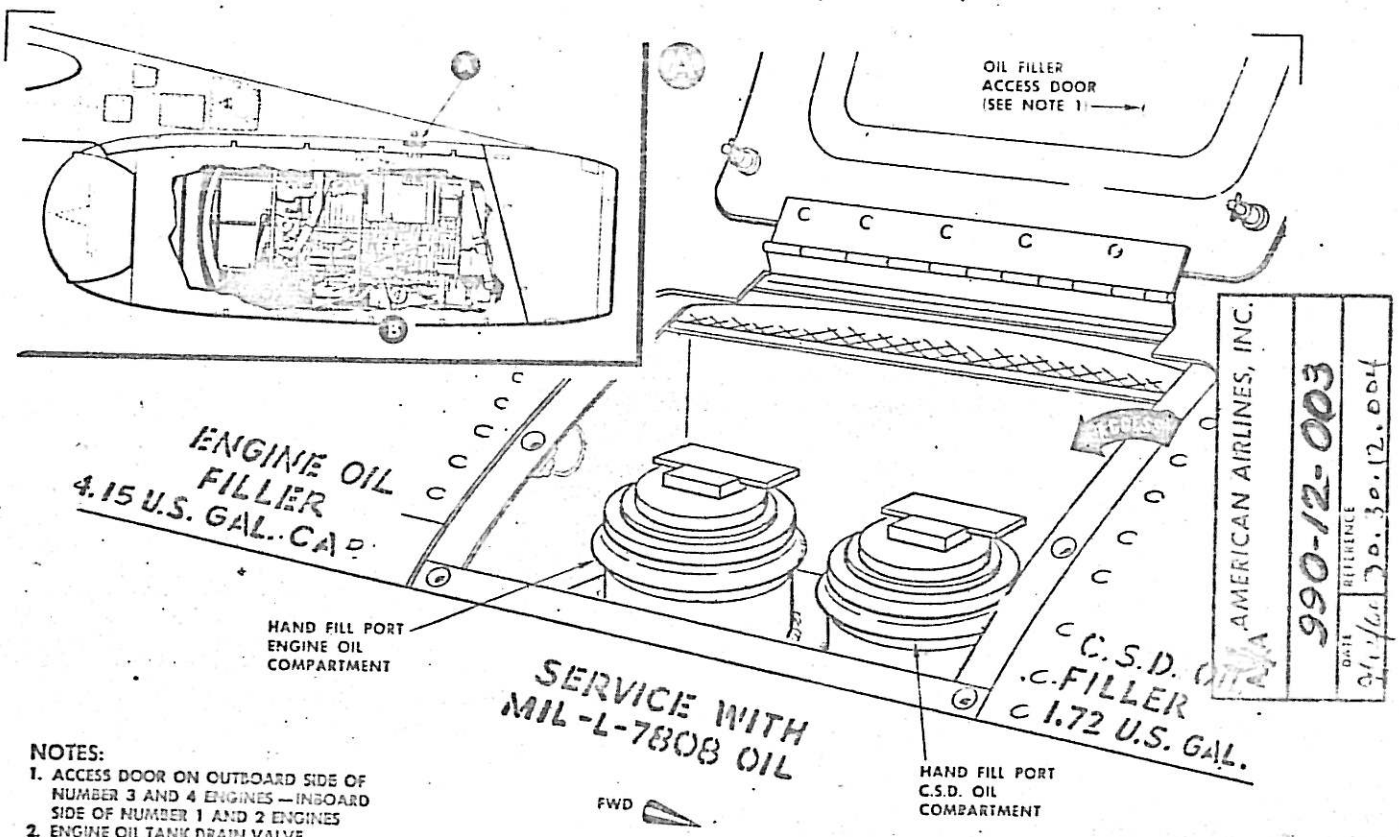

NOTES:
1. ACCESS DOOR ON OUTBOARD SIDE OF NUMBER 3 AND 4 ENGINES—INBOARD SIDE OF NUMBER 1 AND 2 ENGINES
2. ENGINE OIL TANK DRAIN VALVE SHOWN—CSD OIL TANK DRAIN VALVE IDENTICAL

ENGINE OIL FILLER ACCESS PANEL

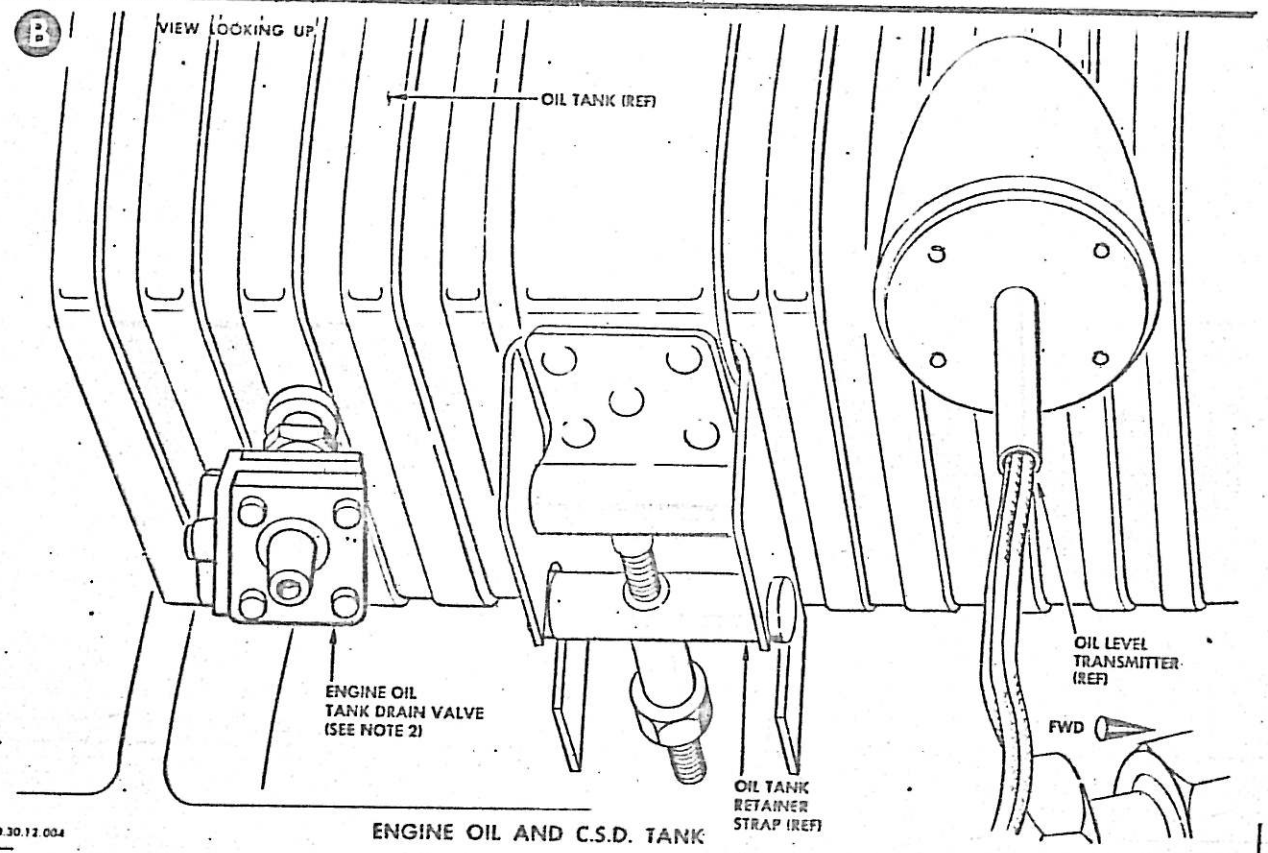

30.30.12.004

ENGINE OIL AND C.S.D. TANK

SERVICING ENGINE AND CONSTANT SPEED DRIVE OIL SYSTEM

30.30.12.009 A

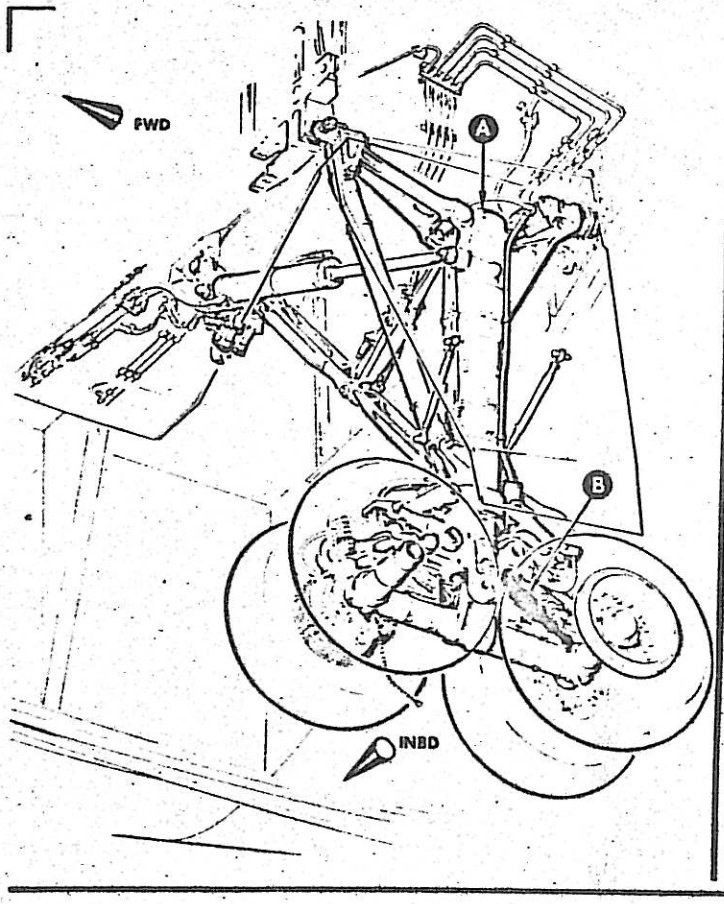

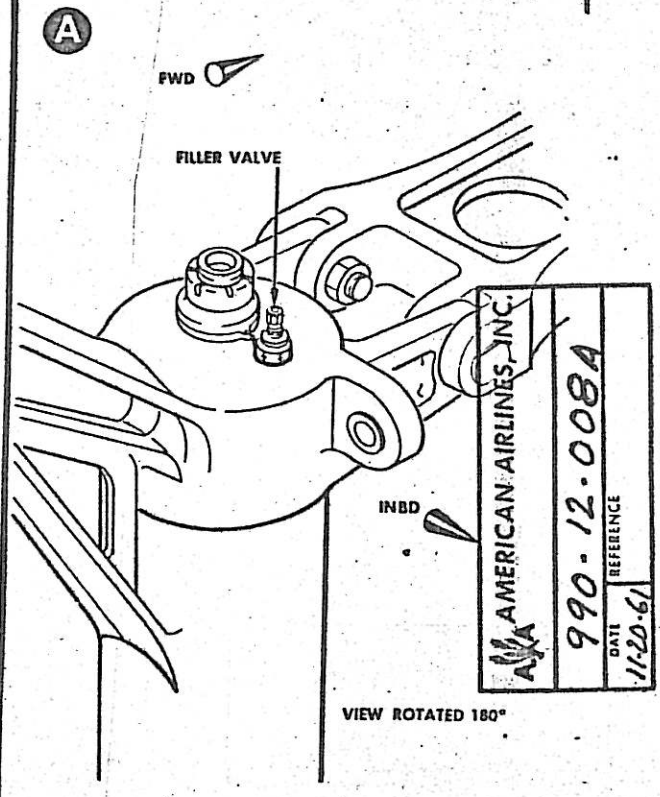

AMERICAN AIRLINES, INC.
990-12-0084
DATE 11-20-61
REFERENCE

SHOCK STRUT AIR-OIL FILLER VALVE

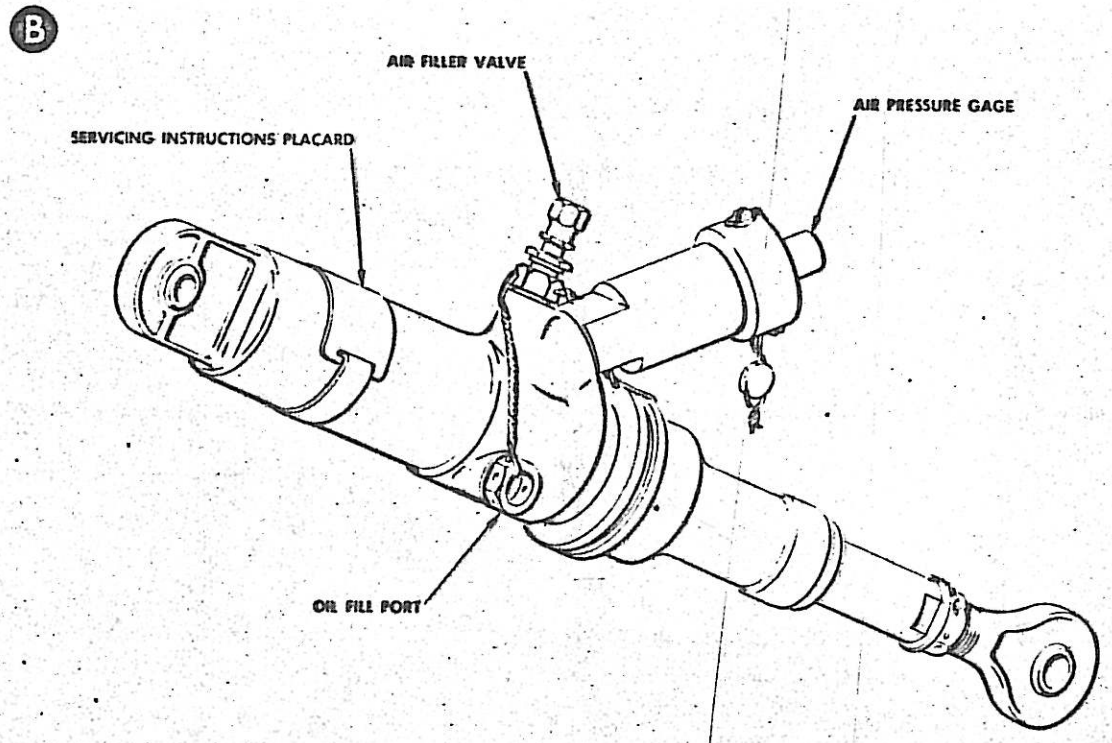

30.30.12.009 A

AMERICAN AIRLINES, INC.
990-12-009
DATE 9/12/60
REFERENCE 30.30.12.014

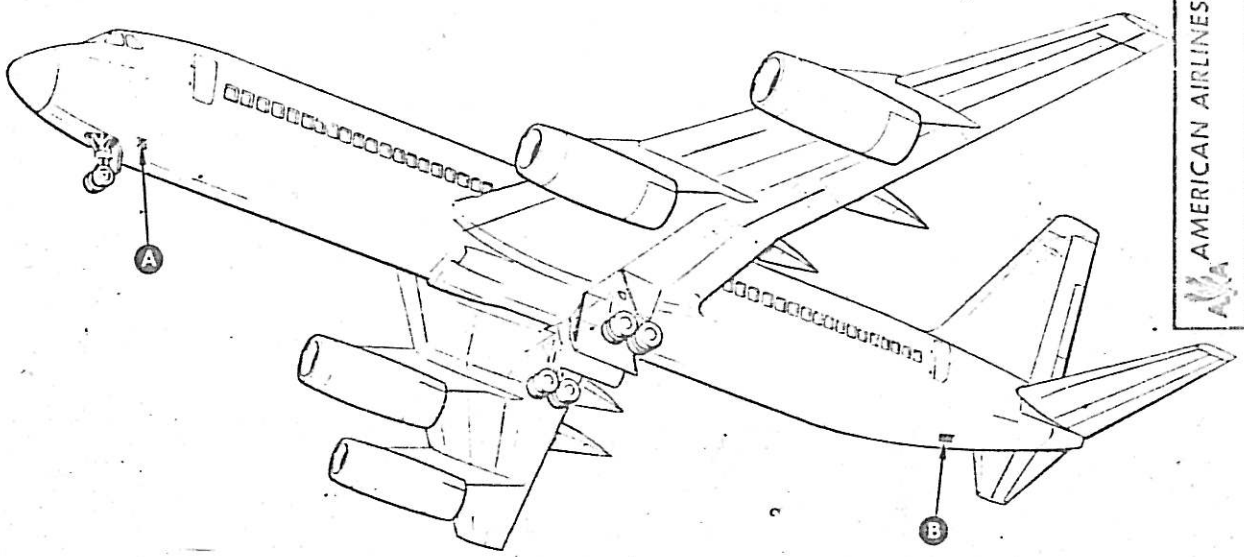

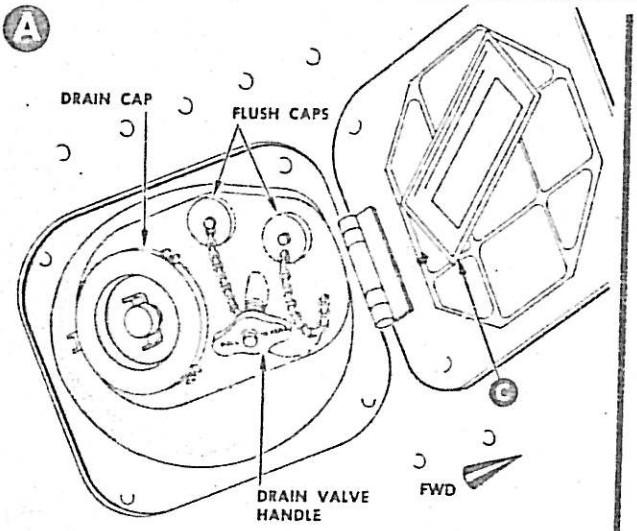

FORWARD SERVICE PANEL (RH SIDE)

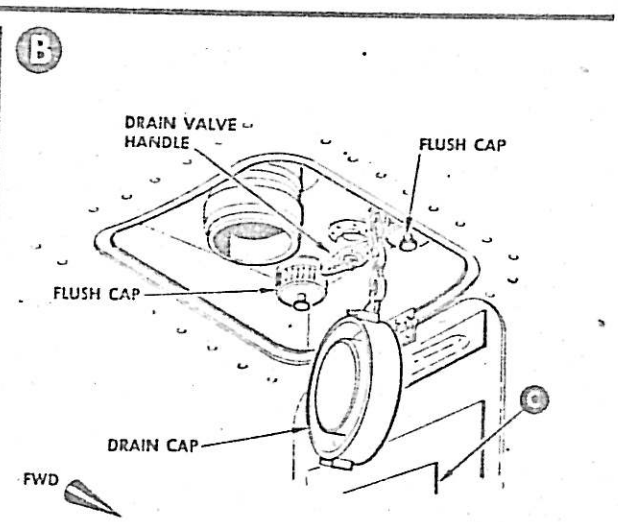

AFT SERVICE PANEL (BOTTOM CENTERLINE)

C

CAUTION: DO NOT PULL DRAIN HANDLE UNTIL DRAIN HOSE HAS BEEN CONNECTED.

1. REMOVE DRAIN AND FLUSH CAPS.
2. CONNECT DRAIN HOSE.
3. OPEN DRAIN VALVE BY DEPRESSING BUTTON IN CENTER OF HANDLE AND PULL (PULL HANDLE ALL THE WAY DOWN BEFORE RELEASING BUTTON).
4. FLUSH TANKS BY CONNECTING WATER HOSE TO FIRST ONE INLET THEN THE OTHER.
5. CLOSE DRAIN VALVE BY DEPRESSING BUTTON IN CENTER OF HANDLE AND PUSHING HANDLE ALL THE WAY UP.
6. DISCONNECT HOSES AND REPLACE DRAIN AND FLUSH CAPS.

1. NOSE WHEEL WELL DOOR (INSIDE OF WHEEL WELL)
2. NOSE LANDING GEAR DOOR (LH, RH AND CENTER)
3. TOW POWER RECEPTACLE DOOR
4. ELECTRICAL EQUIPMENT "TUNNEL" ACCESS DOORS
5. NOSE LANDING GEAR DOWN-LOCK INSPECTION DOOR
6. ELECTRICAL AND ELECTRONIC COMPARTMENT DOOR
7. ELECTRICAL AND ELECTRONIC COMPARTMENT INFLIGHT ACCESS DOOR
8. FORWARD MAIN ENTRANCE DOOR
9. FORWARD LAVATORY SERVICE DOOR
10. EXTERNAL POWER RECEPTACLE DOOR
11. FORWARD SERVICE DOOR
12. FORWARD CARGO COMPARTMENT DOOR
13. FRESH WATER FILLER DOOR
14. GROUND TURBINE COMPRESSOR CONNECTION ACCESS DOOR
15. TURBOCOMPRESSOR ACCESS DOOR
16. HEAT EXCHANGER ACCESS DOOR
17. REFRIGERATION PACKAGE ACCESS DOOR
18. MAIN LANDING GEAR DOORS
19. HYDRAULIC COMPARTMENT DOOR
20. AFT CARGO COMPARTMENT DOOR
21. BAGGAGE DOOR
22. REAR MAIN ENTRANCE DOOR
23. REAR SERVICE DOOR
24. AFT LAVATORY SERVICE DOOR
25. AFT FUSELAGE DOOR
26. TAIL CONE DOOR
27. EMERGENCY EXIT DOORS

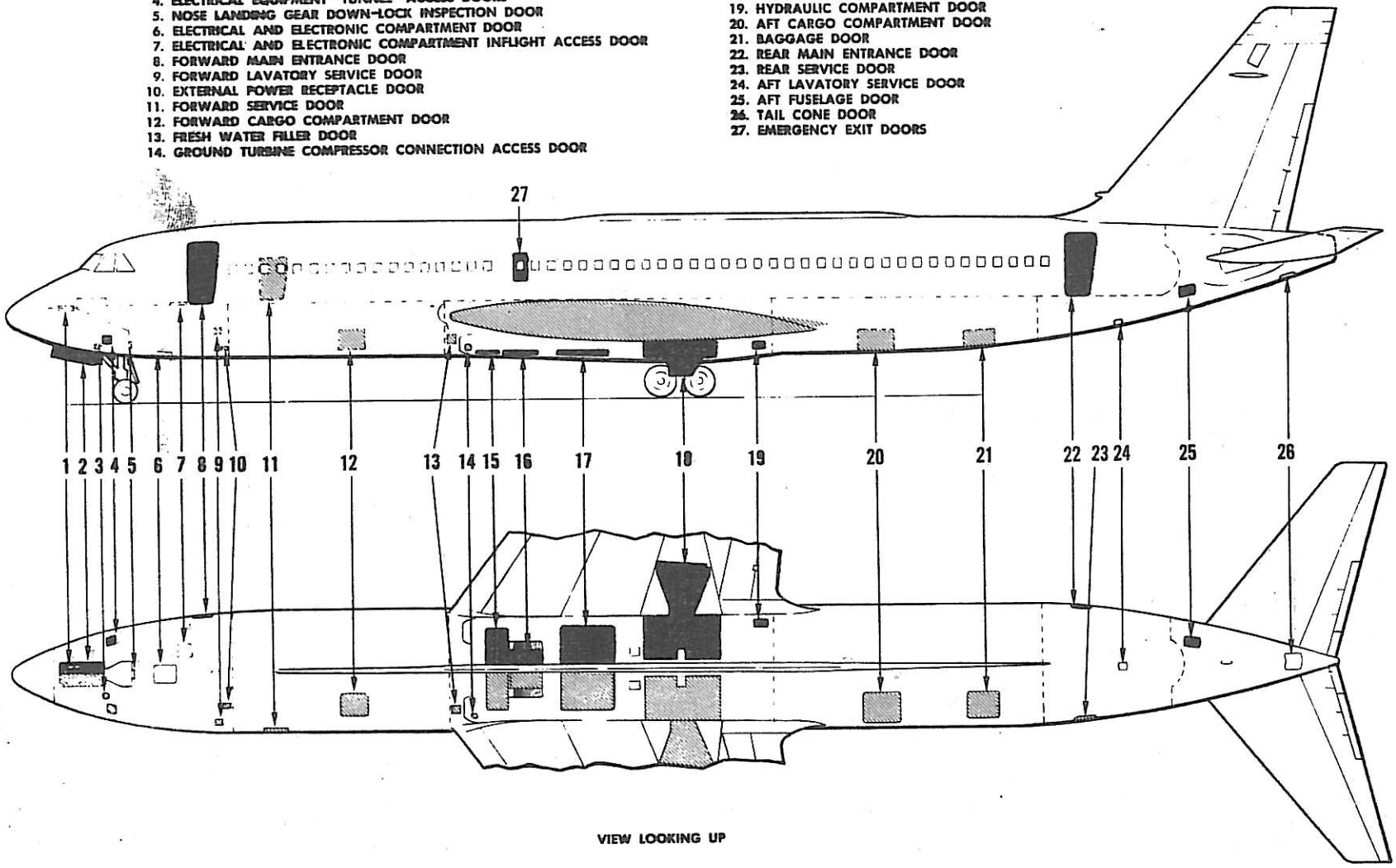

VIEW LOOKING UP

LEFT HAND DOORS
RIGHT HAND DOORS

30.30.12.003-1

.003-1

AMERICAN AIRLINES, INC.

990-12-013

DATE	REFERENCE
9/12/60	30.30.12.003-1

.30.30.12.013 A

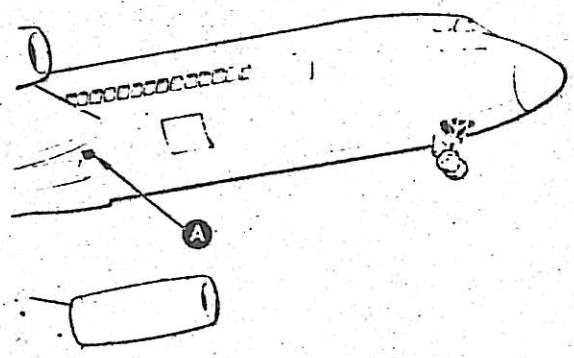

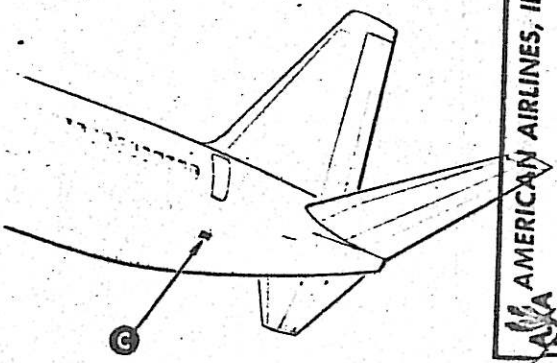

AMERICAN AIRLINES, INC.
390-12-01SA
DATE 11.20.61
REFERENCE

A

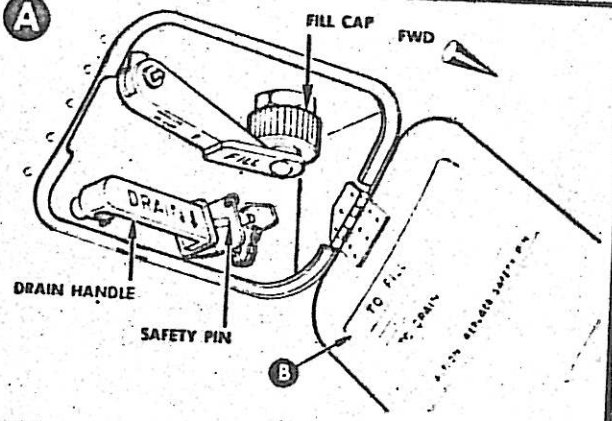

B

TO FILL

1. REMOVE FILL CAP.
2. RELEASE PRESSURE.
3. FILL TANK TO OVERFLOWING.
4. SECURE FILL CAP.

TO DRAIN

1. RELEASE PRESSURE.
2. REMOVE SAFETY PIN ON DRAIN HANDLE.
3. AFTER DRAINING REVERSE PROCESS.

CAUTION: REPLACE SAFETY PIN

C

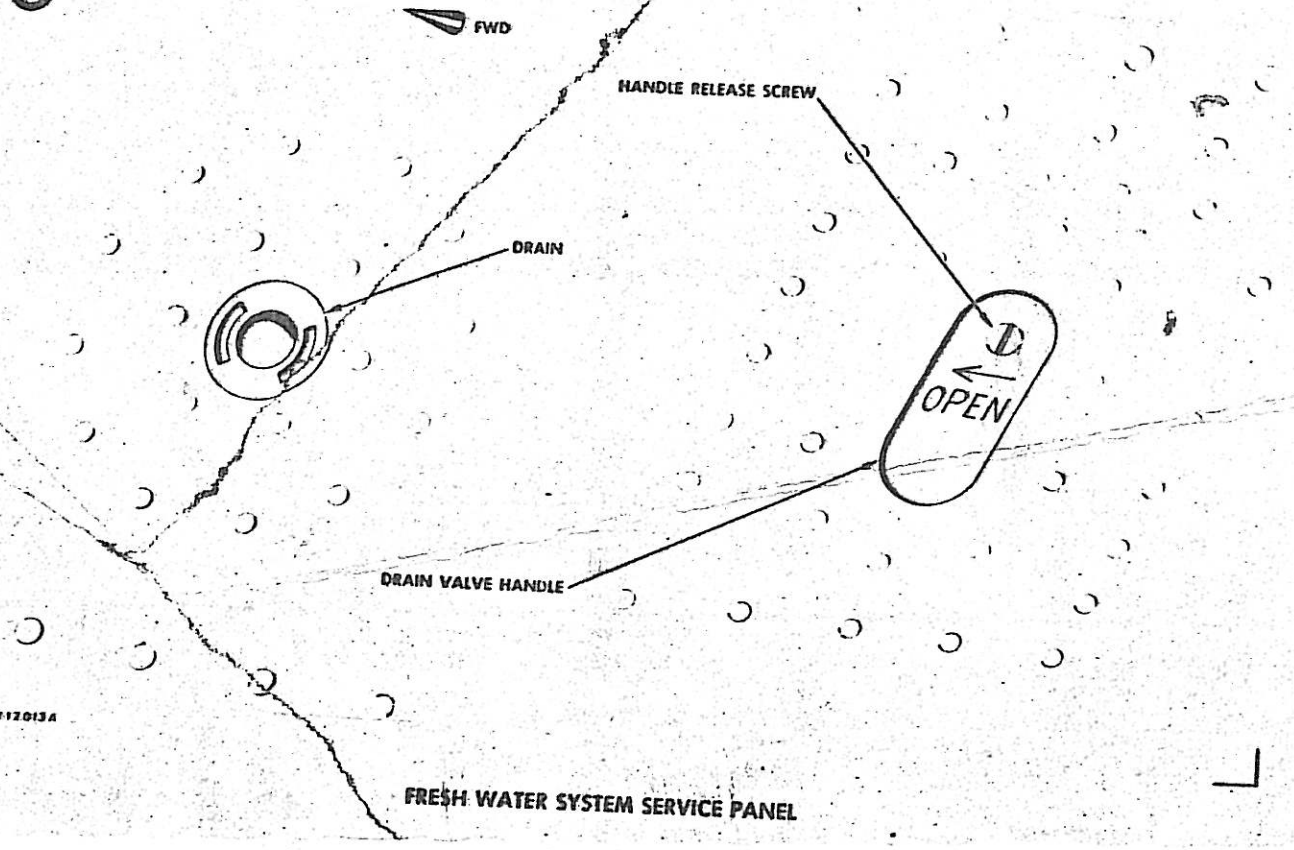

.30.30.12.013 A

FRESH WATER SYSTEM SERVICE PANEL

AMERICAN AIRLINES, INC.
990-12-0164
DATE
REFERENCE

30.30.12.010A

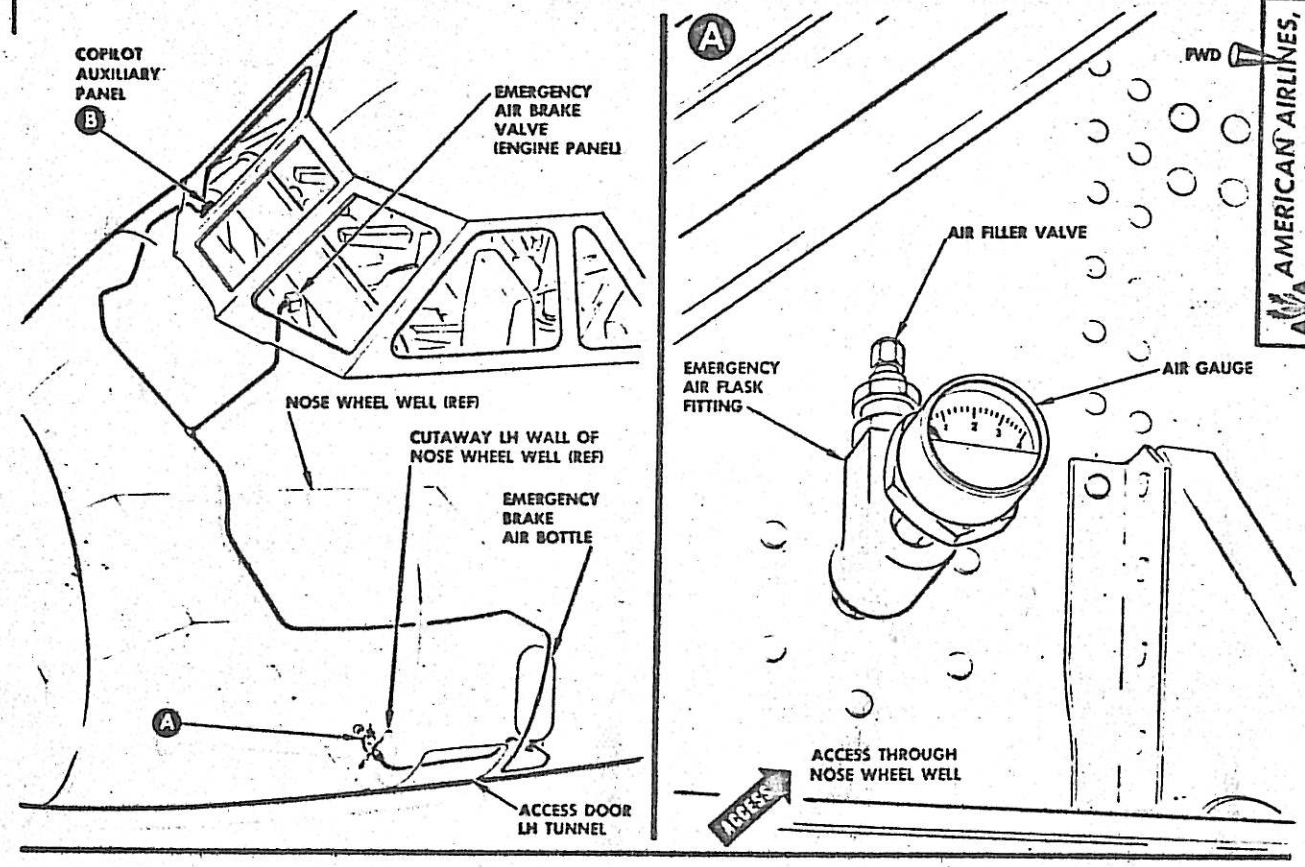

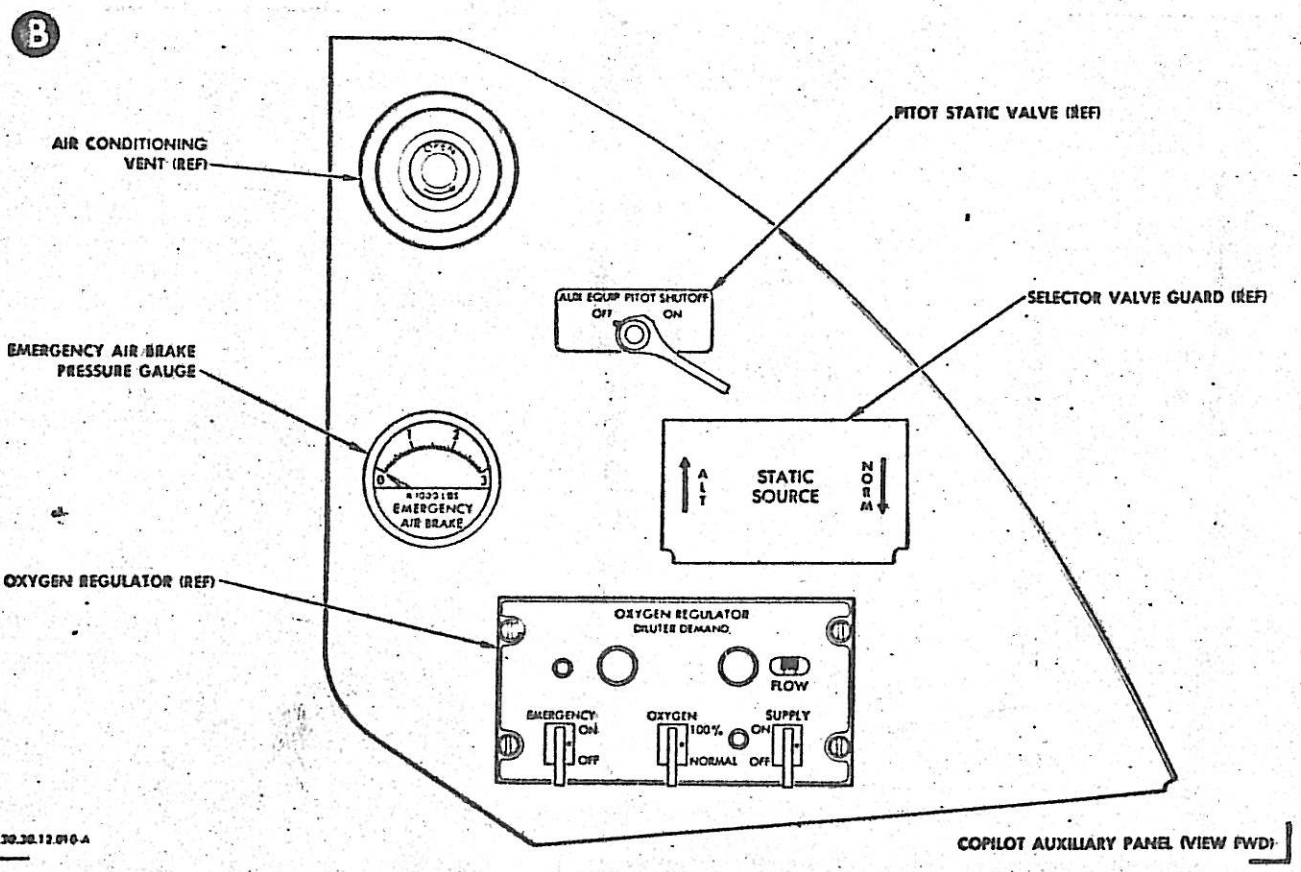

30.30.12.010-A

COPILOT AUXILIARY PANEL (VIEW FWD)

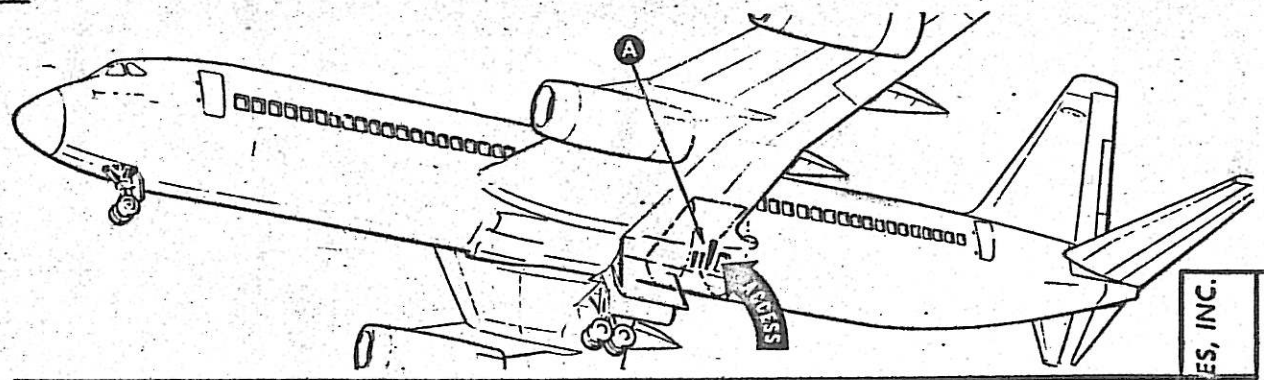

AMERICAN AIRLINES, INC.
990.12.019
DATE 11-20-61
REFERENCE

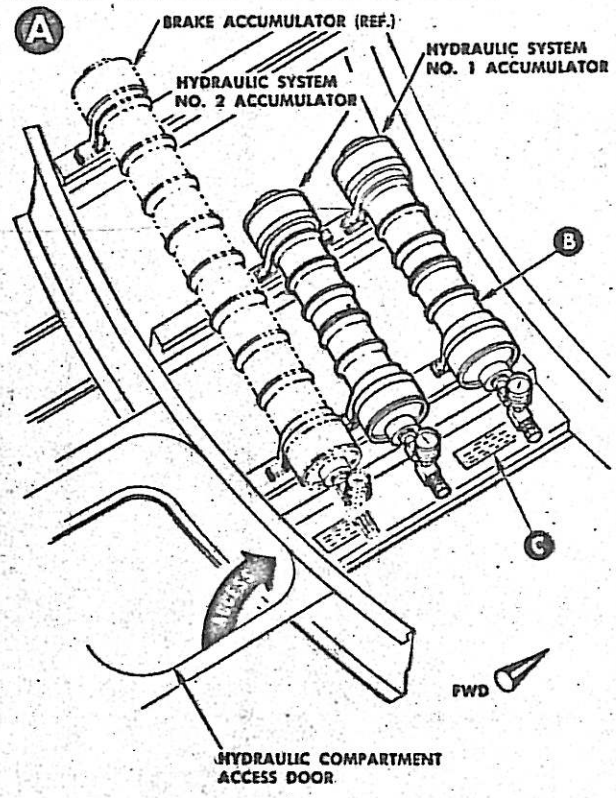

HYDRAULIC COMPARTMENT-LH SIDE

C

SYS. 2 SYS. 1
HYDRAULIC PRESS. ACCUMULATORS
NITROGEN PRECHARGE 900 P.S.I.G.
WITH BOTH HYD. SYSTEMS AT O P.S.I.G.

CHARGING INSTRUCTIONS STENCIL

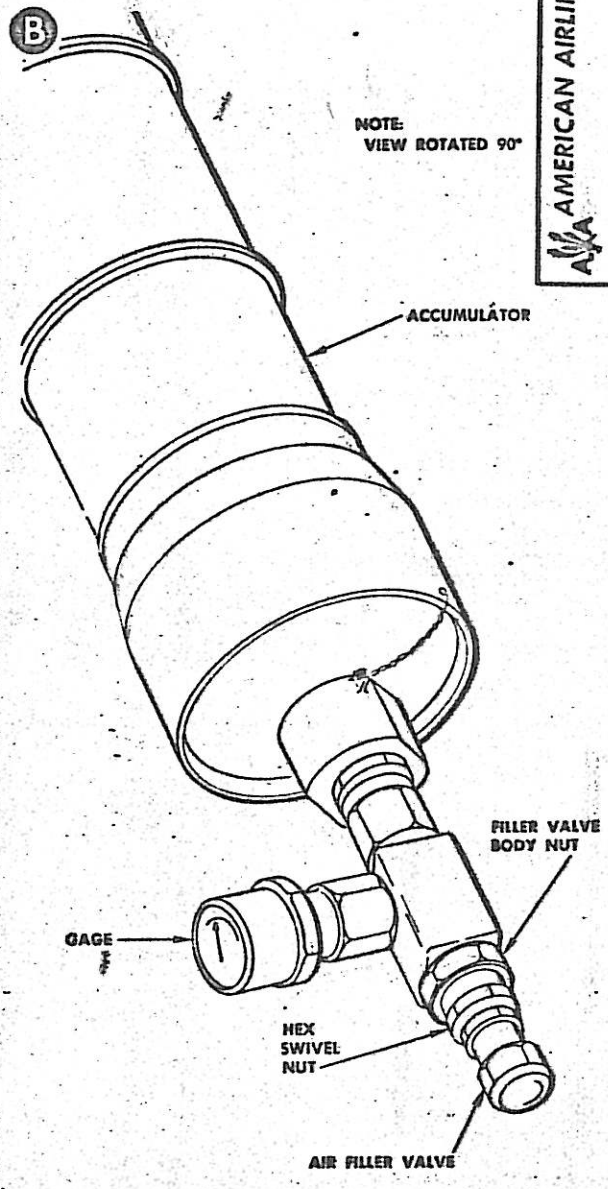

HYDRAULIC PRESSURE LINE ACCUMULATOR

CHARGING HYDRAULIC SYSTEM ACCUMULATORS

30.02.12.056

AMERICAN AIRLINES, INC.
AA
990-12-020
REFERENCE
DATE 11-20-61

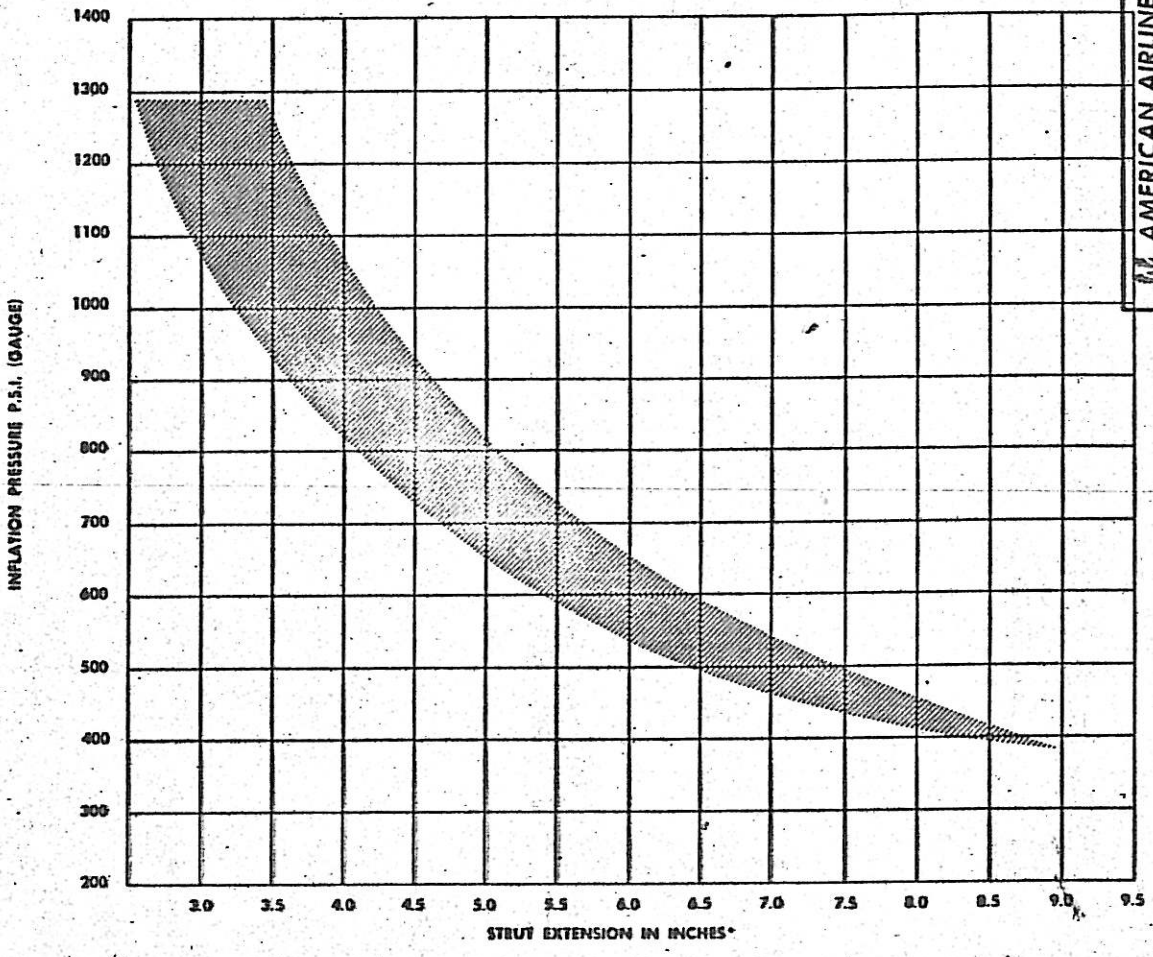

*NOTE:
MEASURE DIMENSION X FROM EDGE OF GLAND NUT TO CENTER OF UPPER JACK PAD LUG.

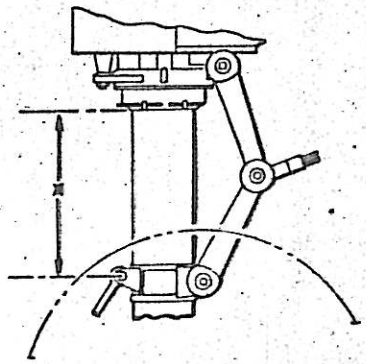

NOSE LANDING GEAR SHOCK STRUT

30.02.12.056

30.02.12.057

AMERICAN AIRLINES, INC.
AA/A
990-12-021
DATE 11.2061 REFERENCE

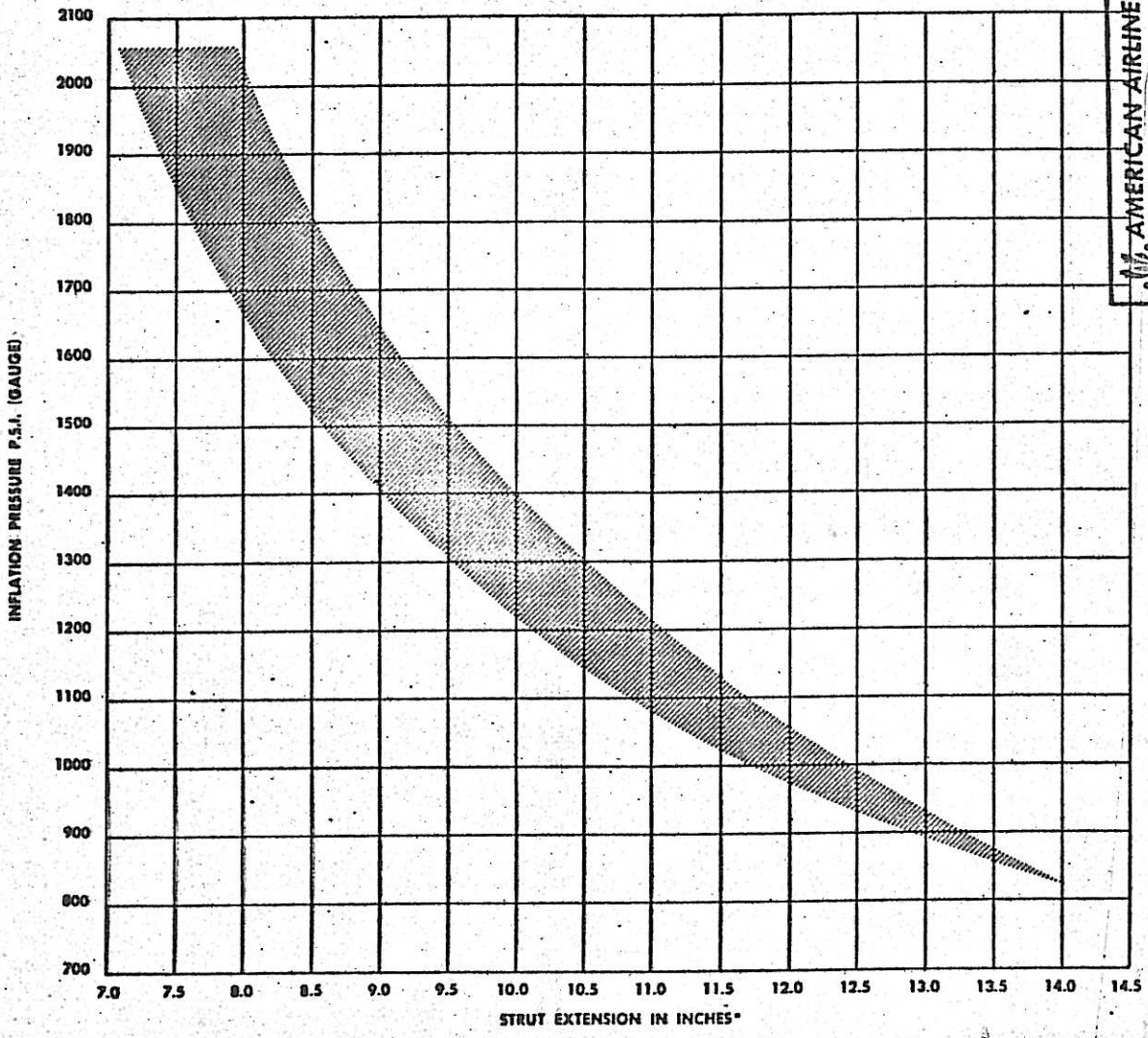

*NOTE:
MEASURE DIMENSION X FROM CENTER OF UPPER AND LOWER TORQUE ARM LUGS.

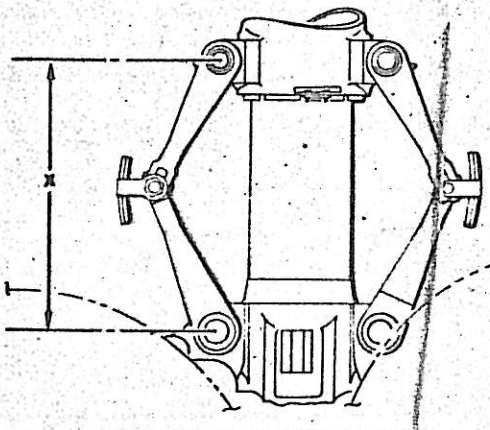

MAIN LANDING GEAR SHOCK STRUT (TYPICAL)

30.02.12.057

30.30.23.009A

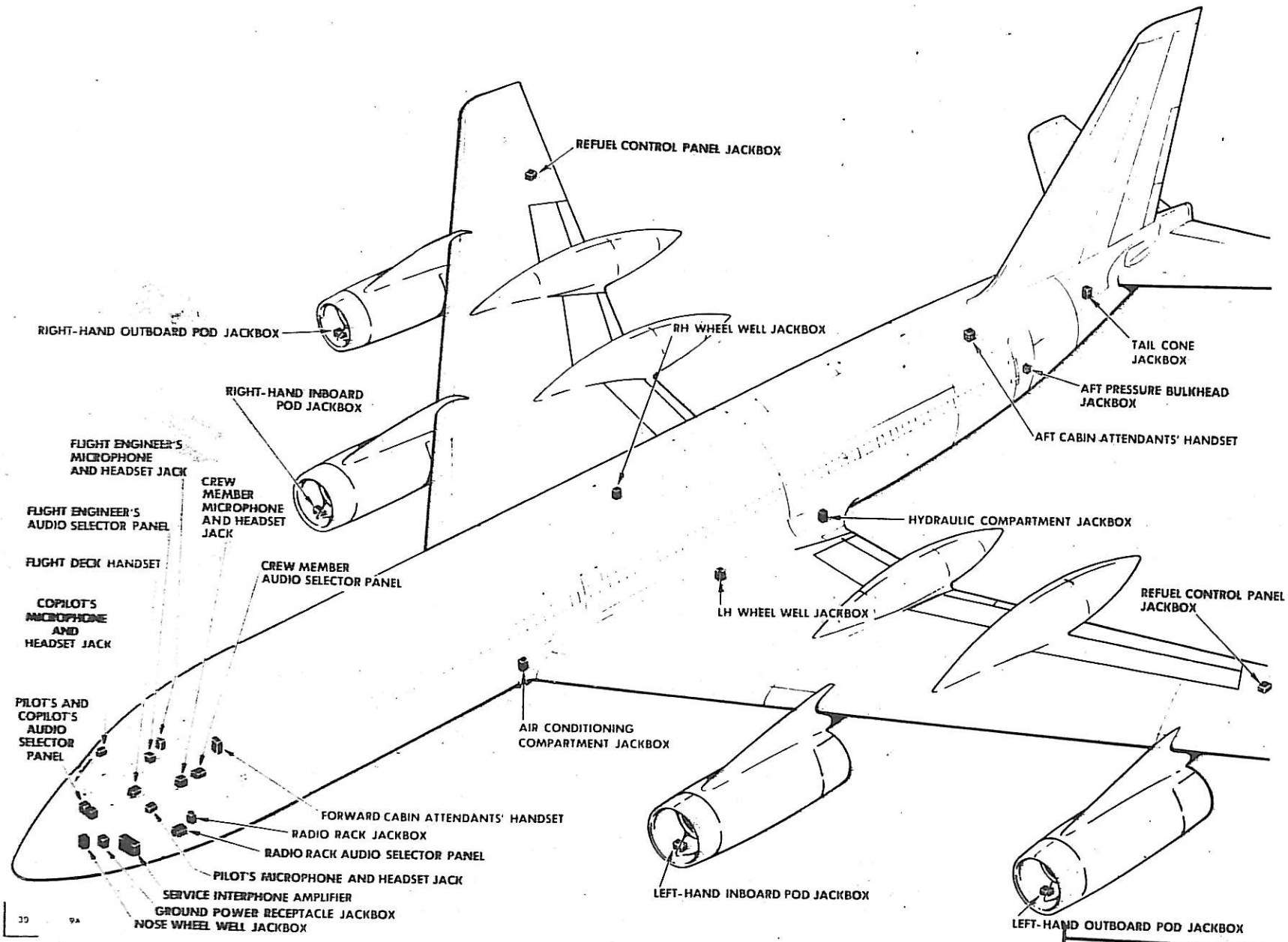

FLIGHT AND SERVICE INTERPHONE SYSTEM LOCATION

990-23-008

DATE 9-13-60 REFERENCE

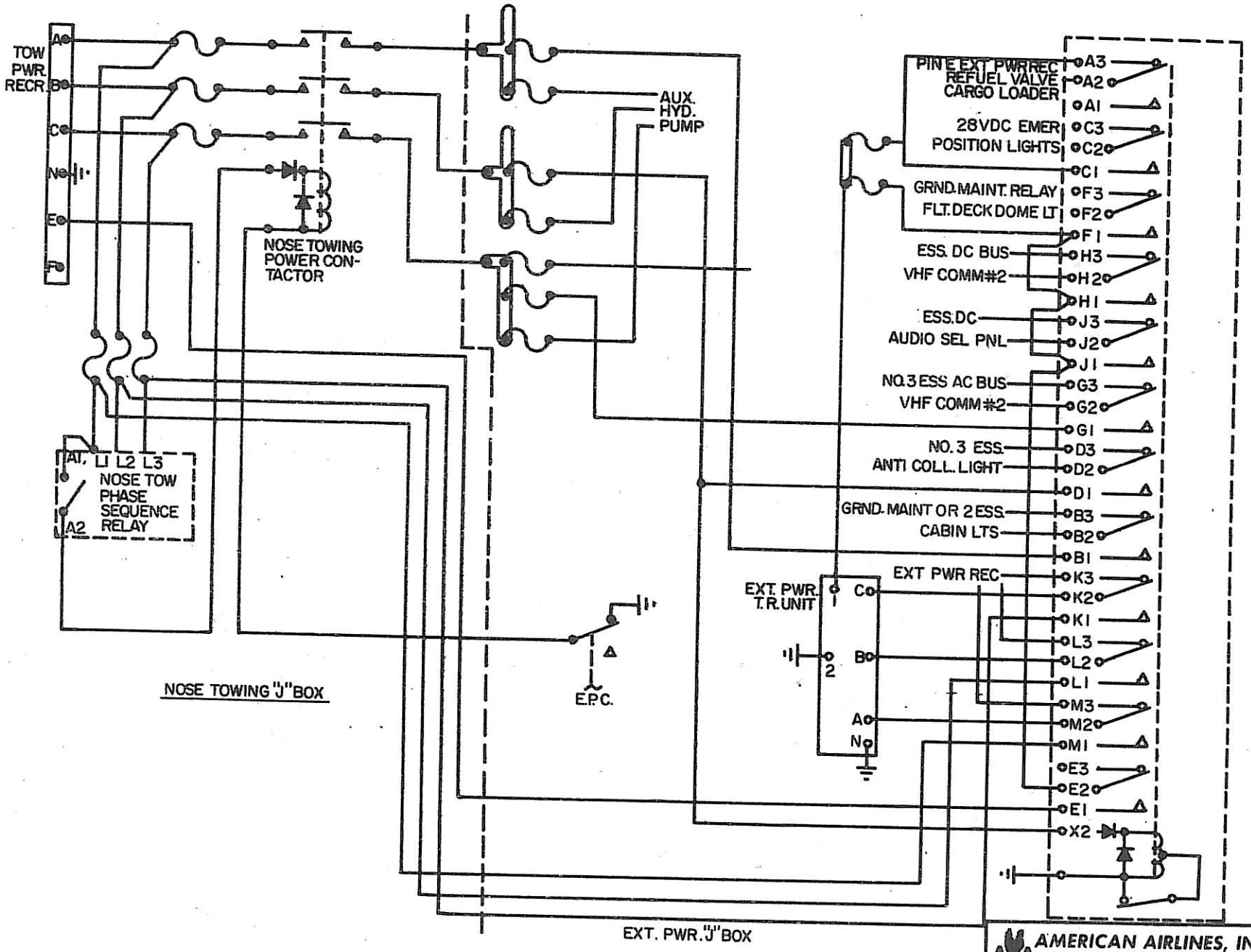

CV-990 NOSE TOWING EXTERNAL POWER

AMERICAN AIRLINES, INC.

990-24-101

DATE	REFERENCE

CV-990 GROUND MAINTENANCE EXTERNAL PWR.

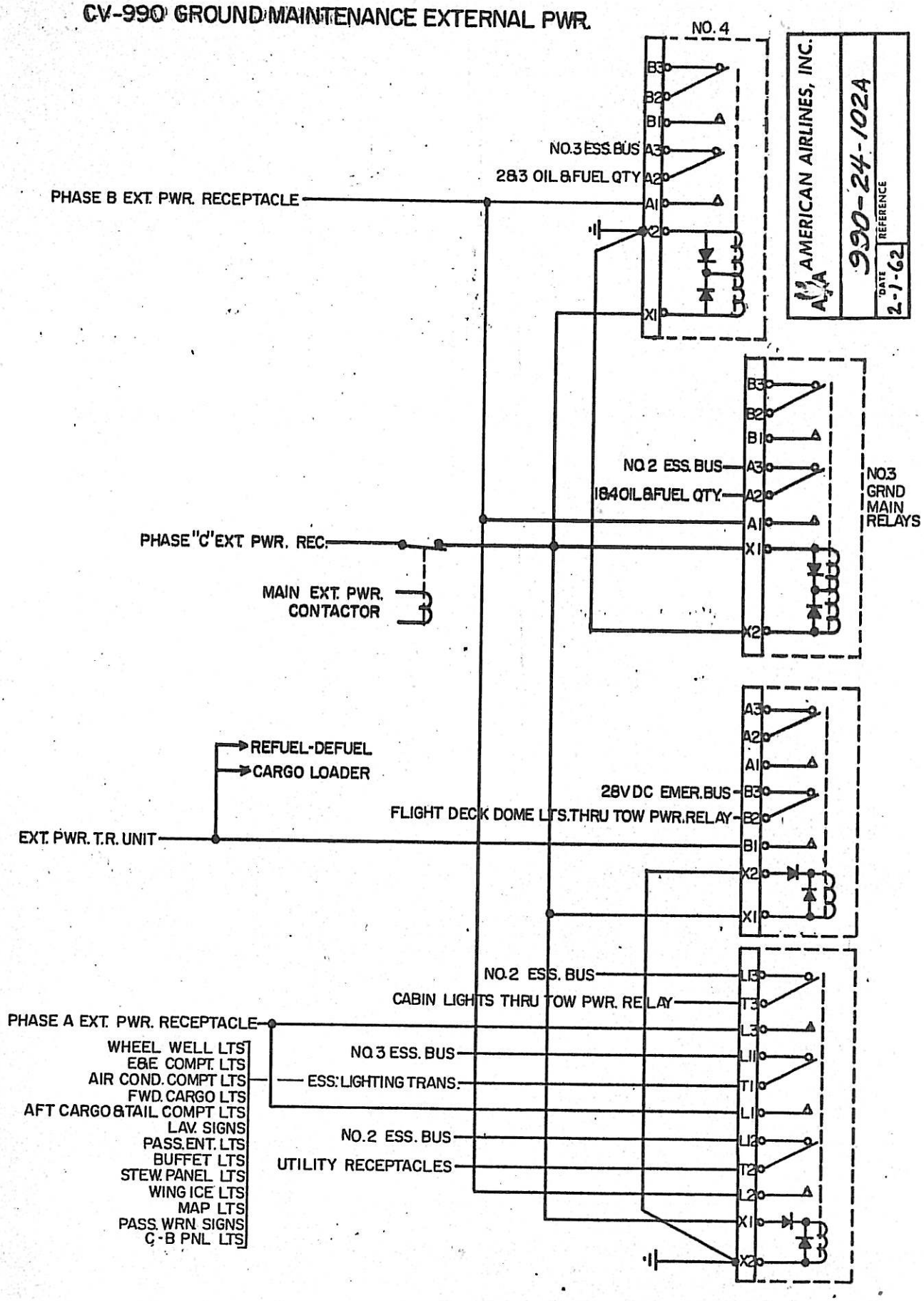

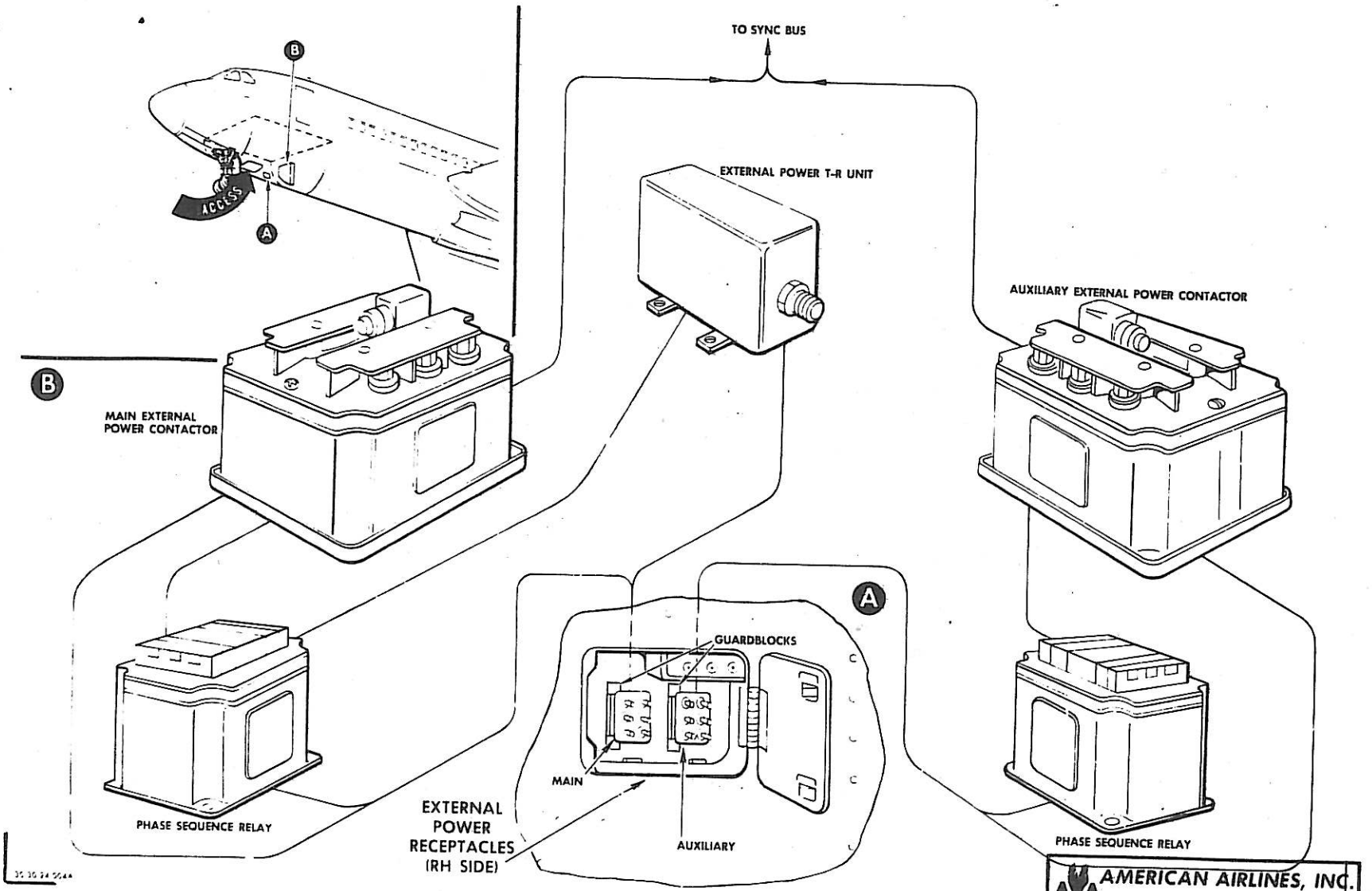

AMERICAN AIRLINES, INC.

990-24-130A

DATE 11-27-61 REFERENCE

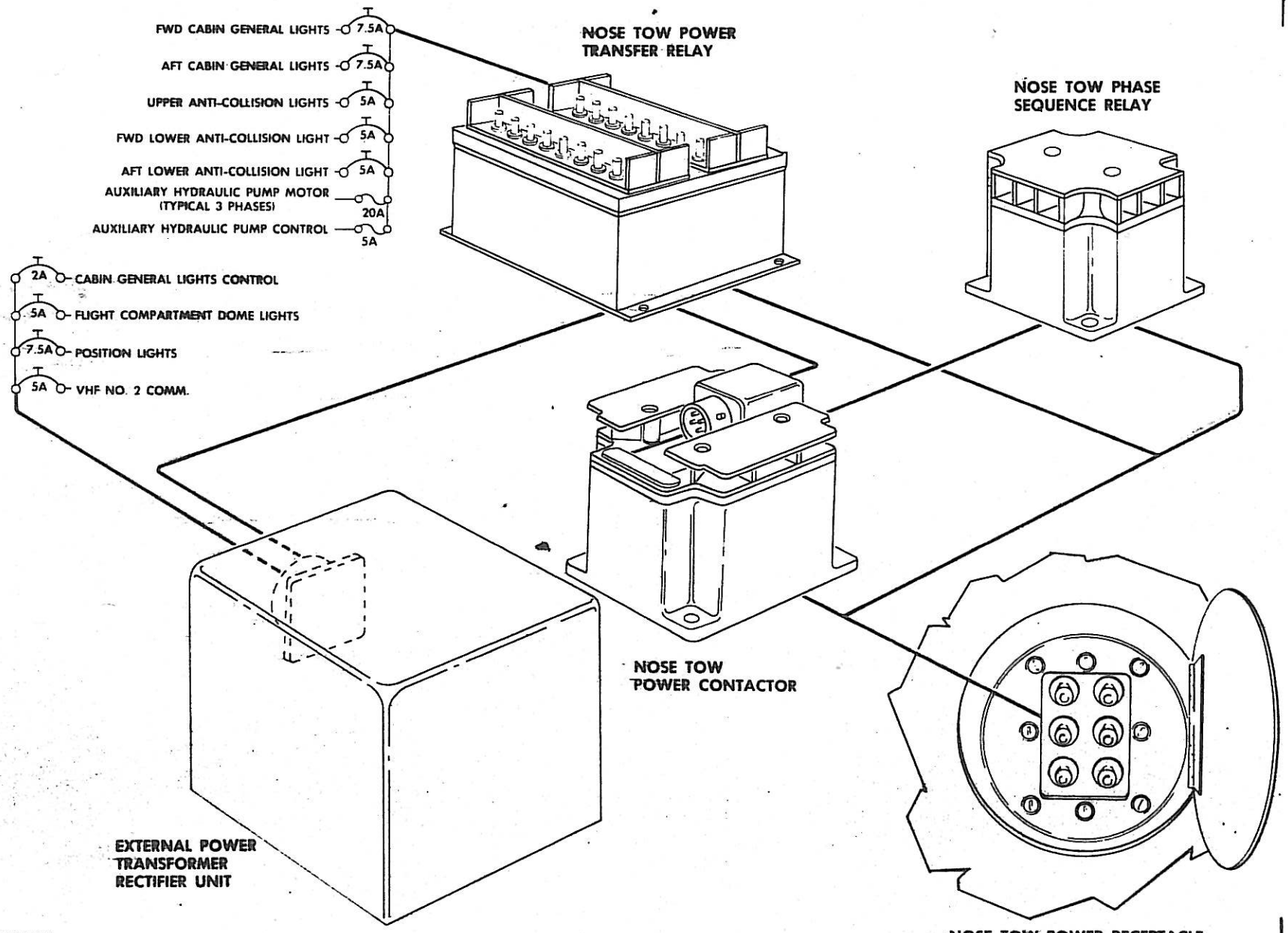

30.02.24.075

TOW POWER BLOCK DIAGRAM

AMERICAN AIRLINES, INC.

990-24-192

DATE	REFERENCE
6/22/61	30.02.24.075

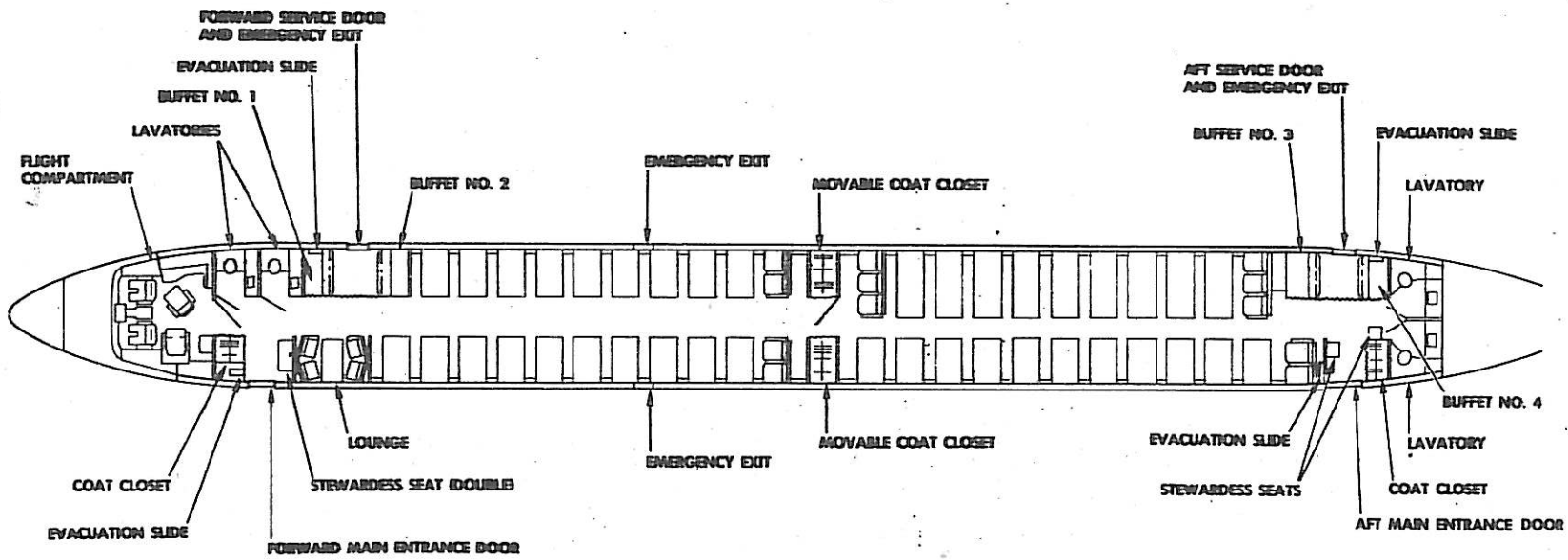

AMERICAN AIRLINES, INC.

990-25-001A

DATE 5-21-62 | REFERENCE

30.30.25.010A

AMERICAN AIRLINES, INC.
990-25-003
DATE 4-13-66 REFERENCE 30-30-25-010A

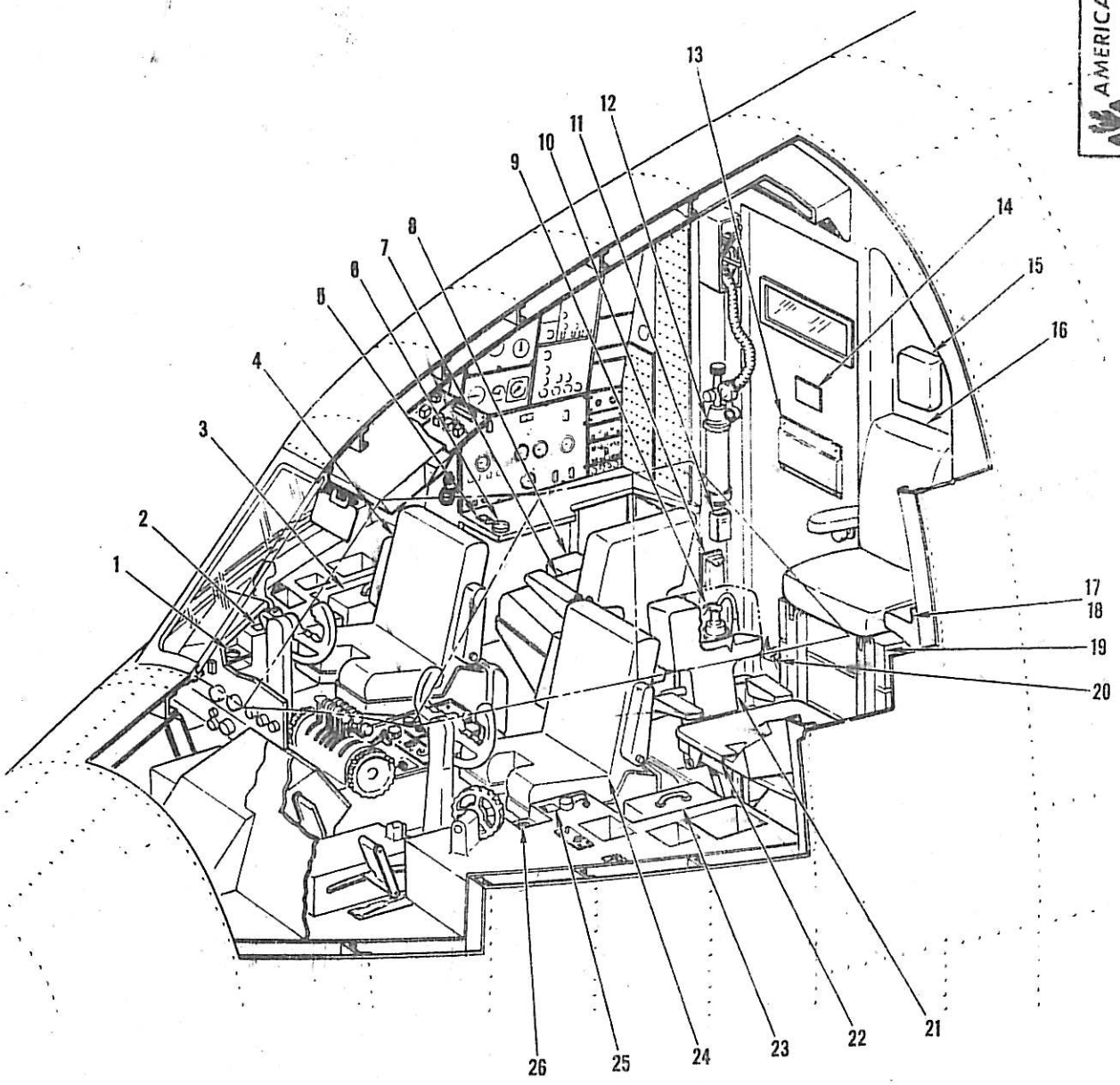

1. COPILOT'S CUP HOLDER
2. COPILOT'S ASH TRAY
3. FLIGHT KIT
4. COPILOT'S SEAT
5. FLIGHT ENGINEER'S ASH TRAY
6. FLIGHT ENGINEER'S CUP HOLDER
7. FLIGHT ENGINEER'S SEAT
8. FLIGHT KIT
9. CO_2 FIRE EXTINGUISHER
10. LANDING GEAR DOWN LOCK SAFETY PIN STOWAGE
11. SPARE BULB STOWAGE
12. PORTABLE OXYGEN BOTTLE
13. RADIO LICENSE HOLDER
14. AIR WORTHINESS CERTIFICATE
15. OBSERVER'S HEAD REST
16. OBSERVER'S SEAT
17. OBSERVER'S CUP HOLDER
18. OBSERVER'S ASH TRAY
19. CREW'S LUGGAGE
20. EMERGENCY FIRE AXE
21. ADDITIONAL CREW MEMBER'S SEAT
22. ADDITIONAL CREW MEMBER'S TABLE
23. FLIGHT KIT
24. PILOT'S SEAT
25. PILOT'S ASH TRAY
26. PILOT'S CUP HOLDER

30.30.25.010 A

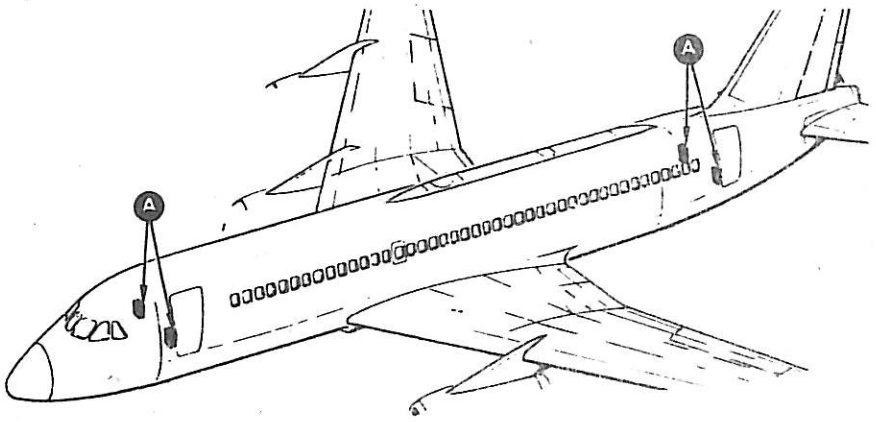

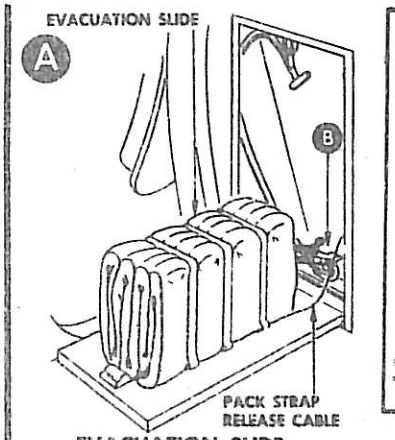

EVACUATION SLIDE
PANEL OPEN-TYPICAL

AMERICAN AIRLINES, INC.
990-25-092
REFERENCE
DATE 2-20-62

AIR PRESSURE CONTROL VALVE

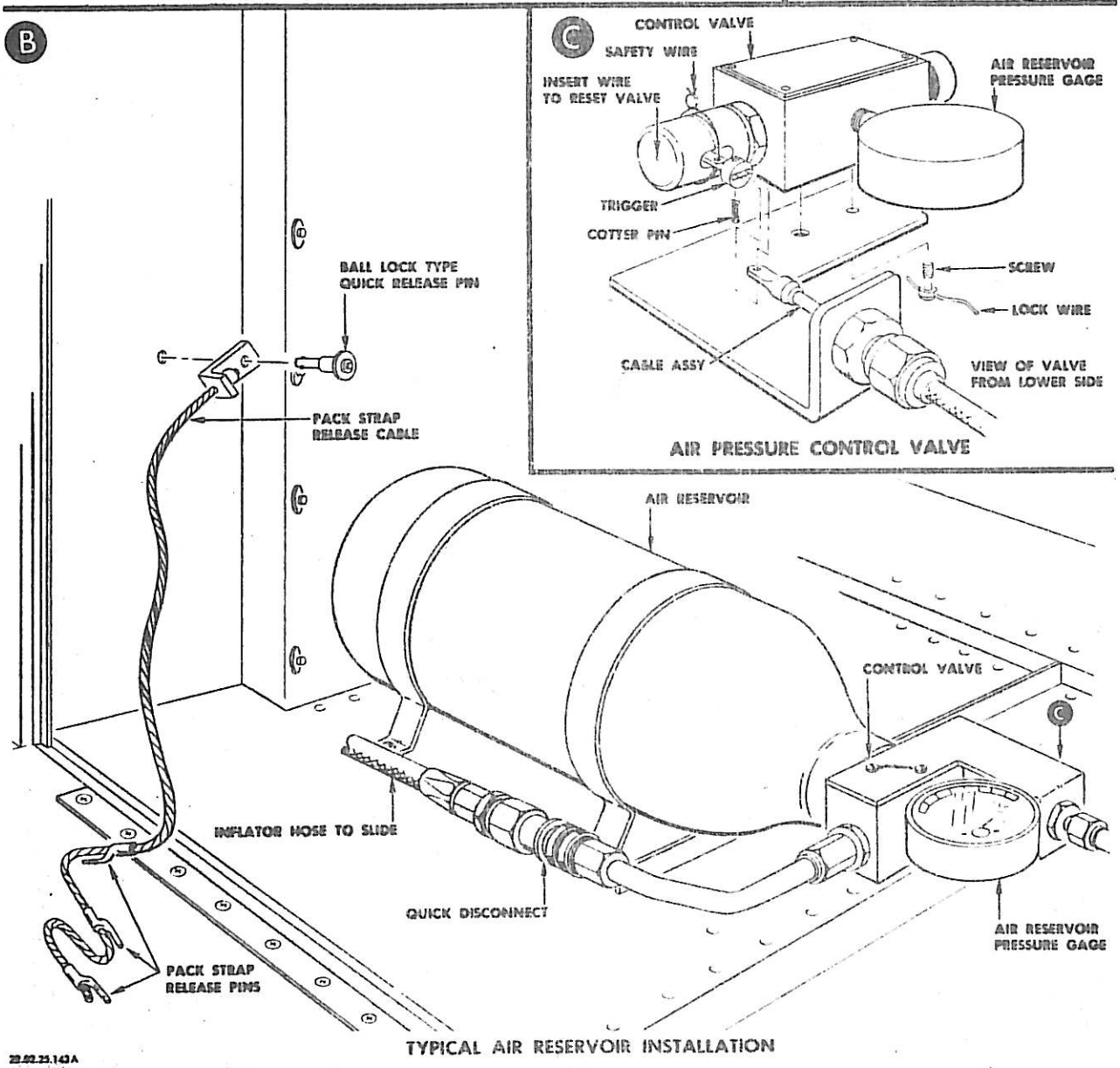

TYPICAL AIR RESERVOIR INSTALLATION

Evacuation Slide and Air Reservoir Installation

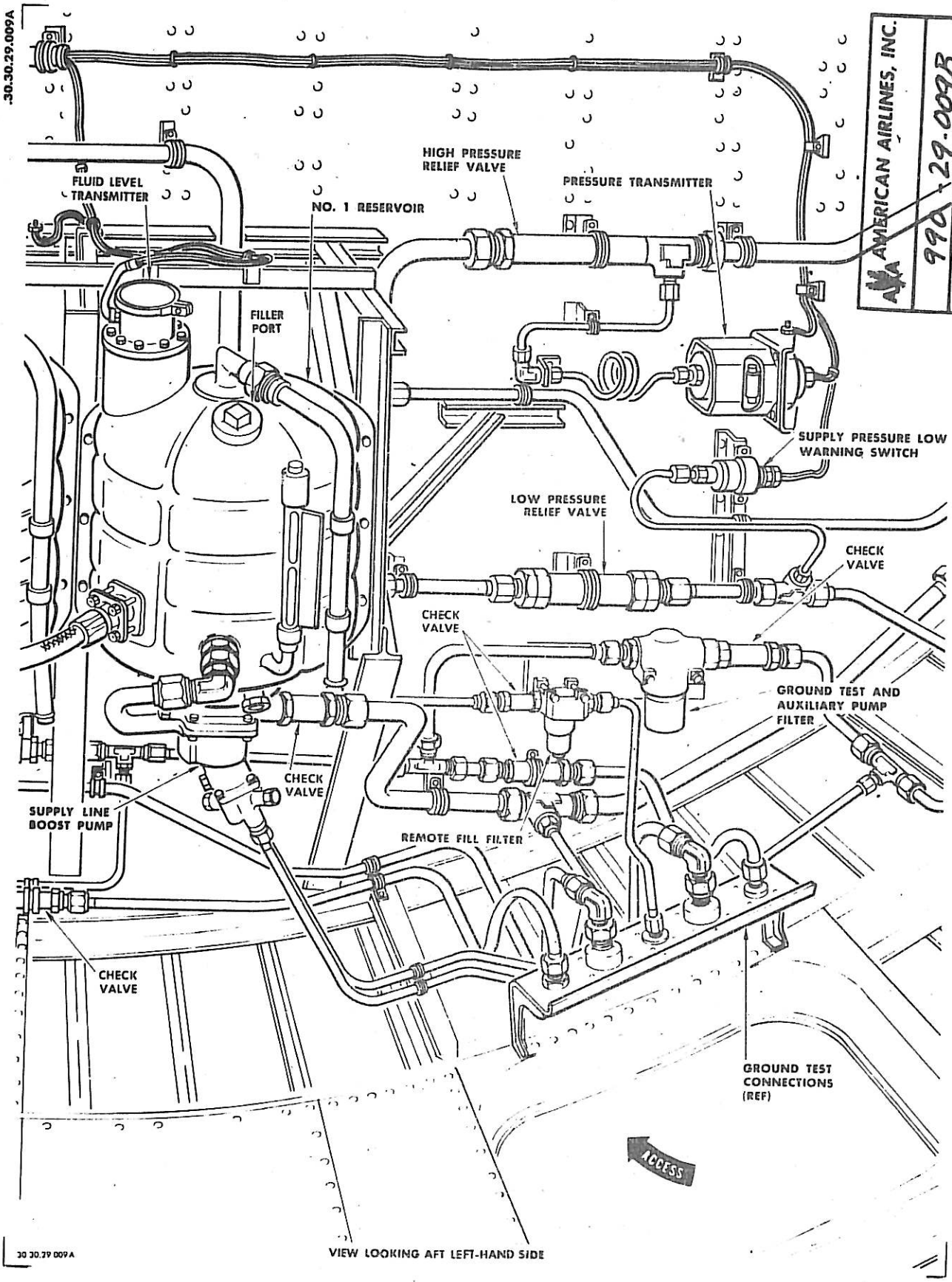

.30.30.29.009A
FLUID LEVEL TRANSMITTER
NO. 1 RESERVOIR
HIGH PRESSURE RELIEF VALVE
PRESSURE TRANSMITTER
FILLER PORT
SUPPLY PRESSURE LOW WARNING SWITCH
LOW PRESSURE RELIEF VALVE
CHECK VALVE
CHECK VALVE
GROUND TEST AND AUXILIARY PUMP FILTER
CHECK VALVE
SUPPLY LINE BOOST PUMP
REMOTE FILL FILTER
CHECK VALVE
GROUND TEST CONNECTIONS (REF)
ACCESS
AMERICAN AIRLINES, INC.
990-29-009B
REFERENCE
DATE
11-22-61
30 30.29 009A
VIEW LOOKING AFT LEFT-HAND SIDE

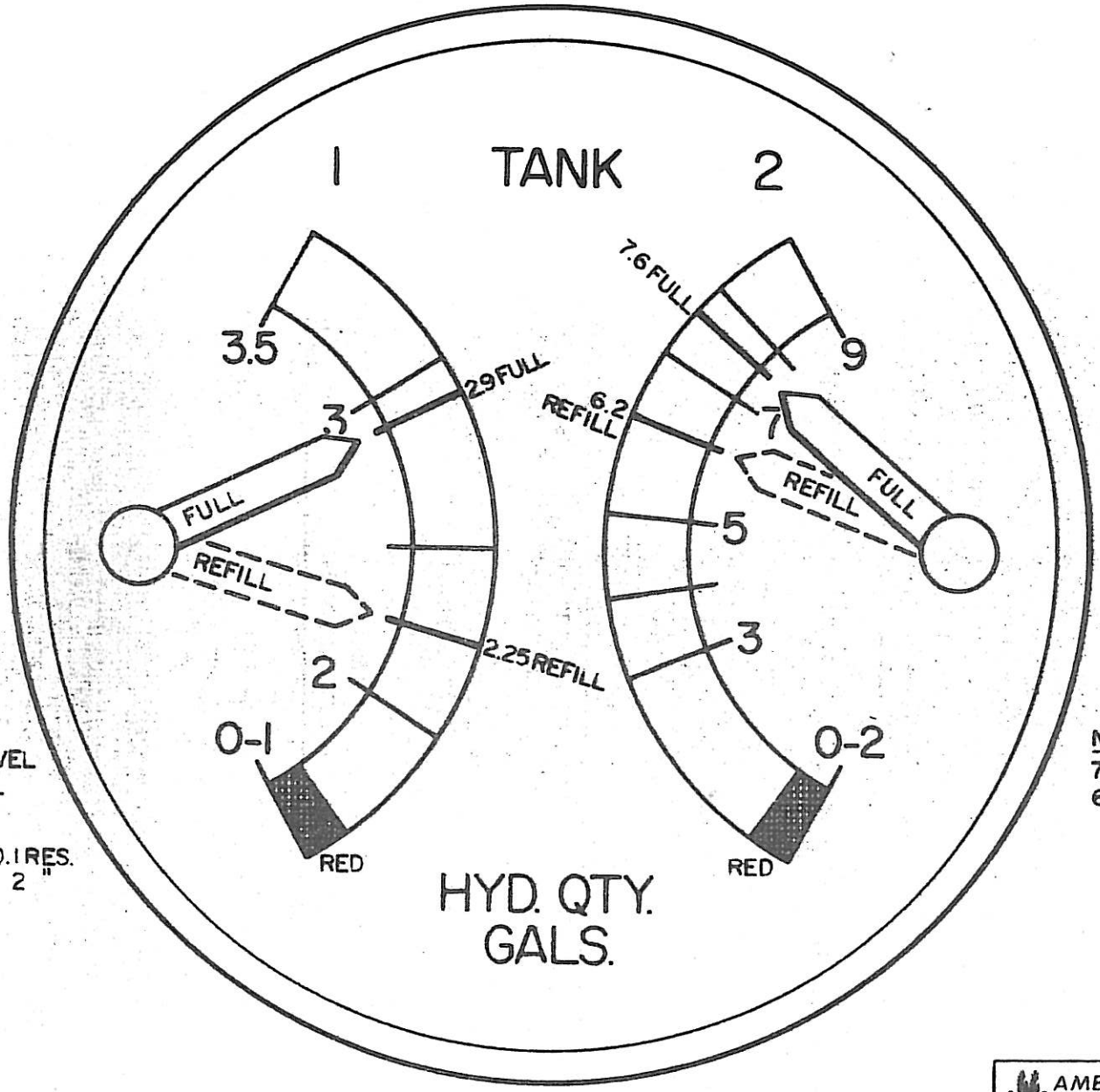

NO.1 SYSTEM
2.9 OPERATING LEVEL
2.25 REFILL LEVEL

NEEDLES IN RED
1 GAL. FLUID IN NO.1 RES.
2 " " " " 2 "

NO.2 SYSTEM
7.6 OPERATING LEVEL
6.2 REFILL LEVEL

CV-990 HYD. SYSTEM QUANTITY INDICATOR

AMERICAN AIRLINES, INC.

990-29-039

DATE 7-26-61 | REFERENCE

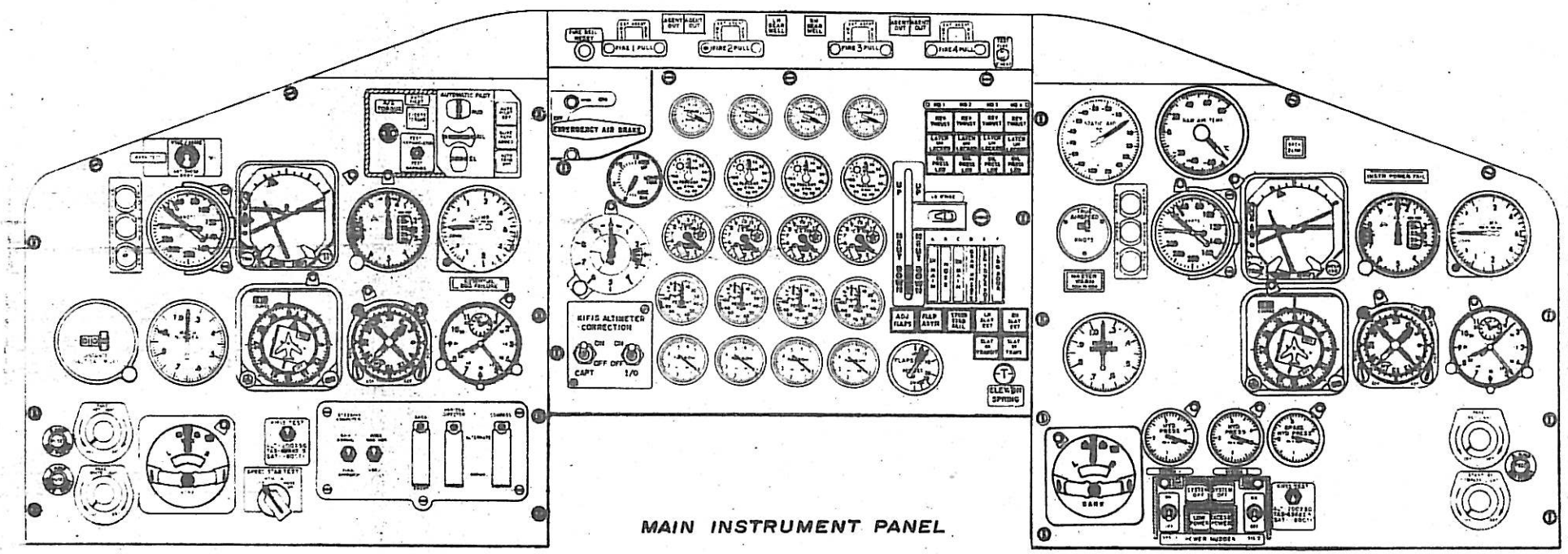

MAIN INSTRUMENT PANEL

AMERICAN AIRLINES, INC.

990-31-001A

DATE	REFERENCE
2-25-62	

AMERICAN AIRLINES, INC.
990-31-005A
REFERENCE
DATE 2-25-62

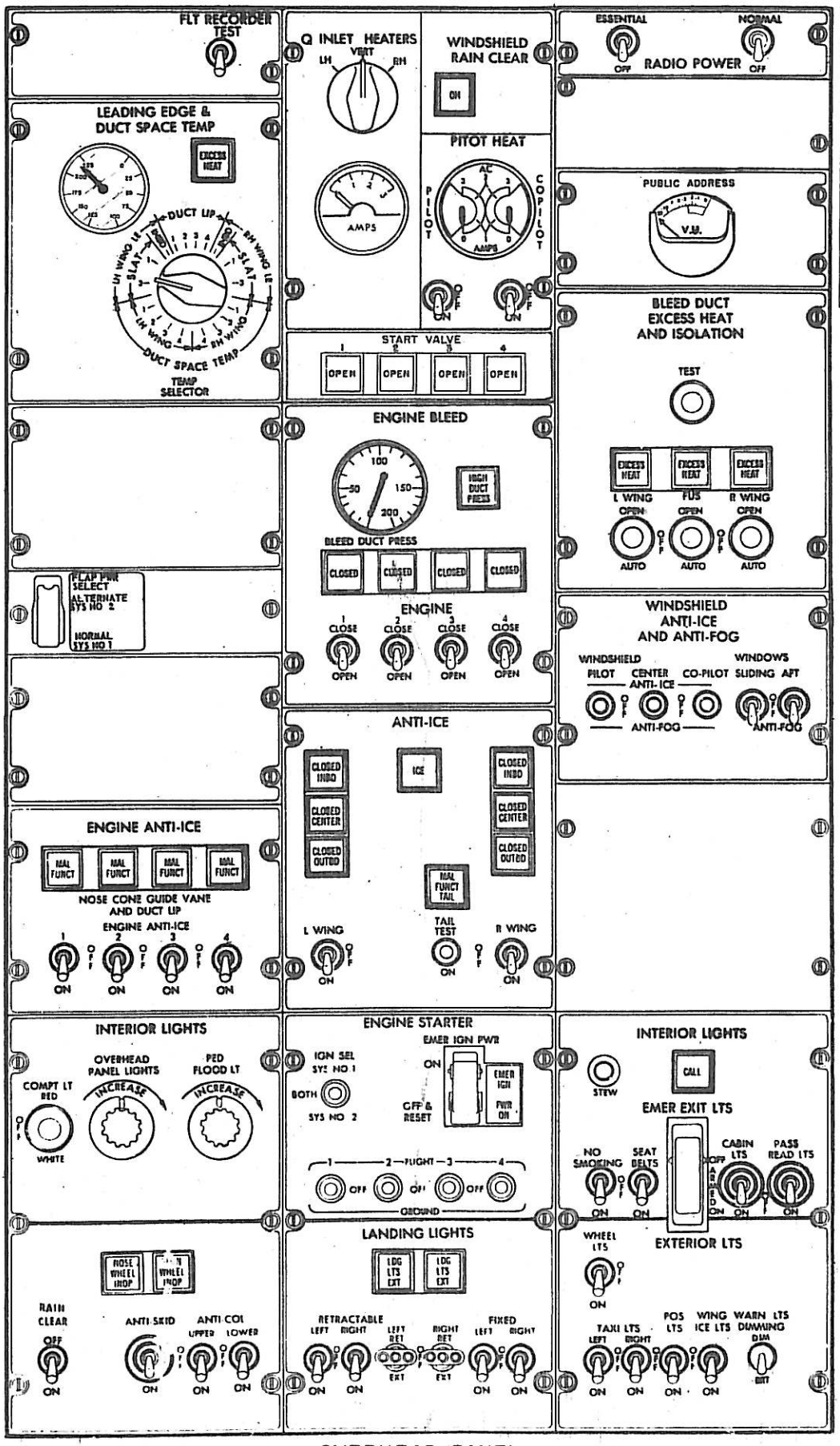

OVERHEAD PANEL

AMERICAN AIRLINES, INC.

990-31-009A

DATE 4-25-62

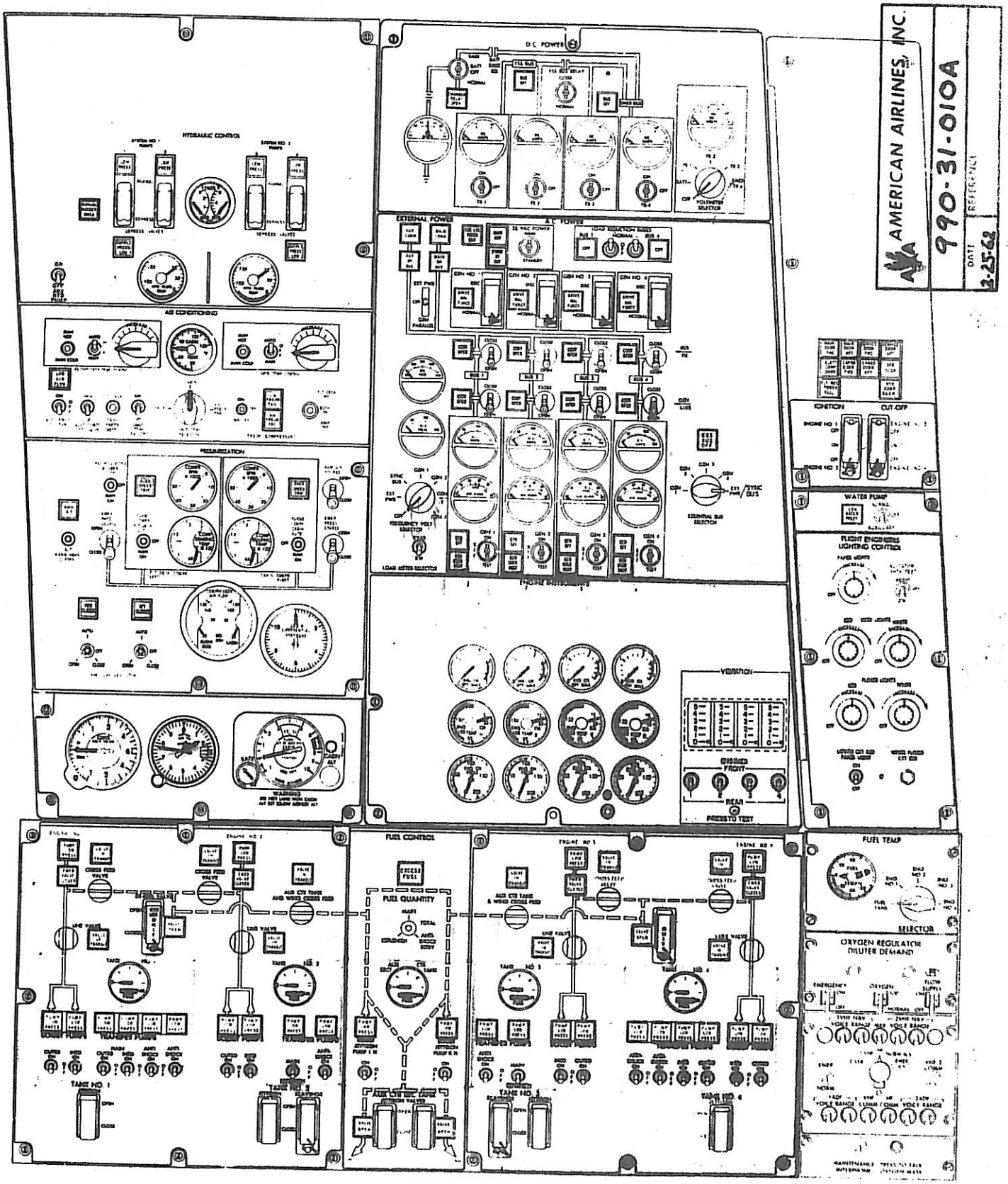

FLIGHT ENGINEER'S PANEL

30.02 31 047

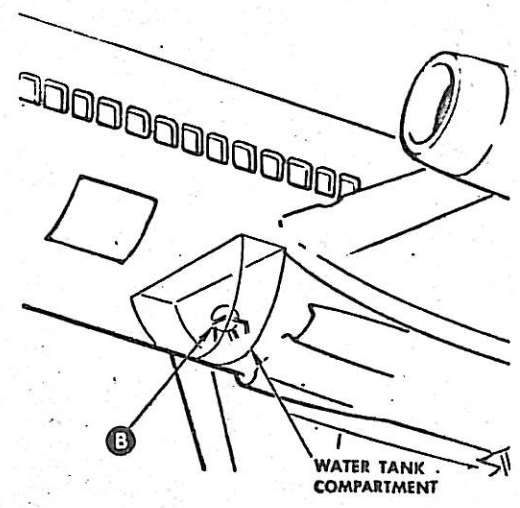

A

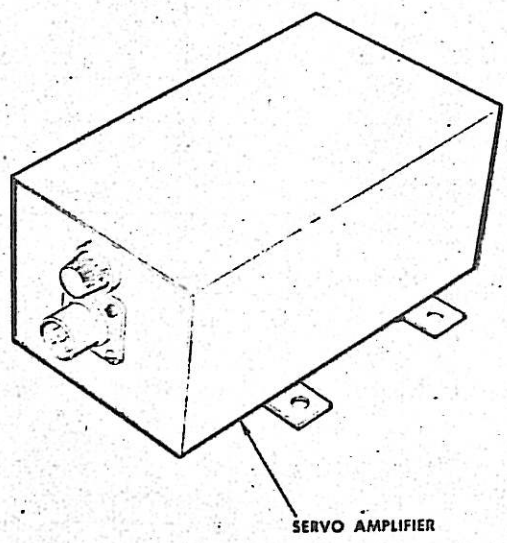

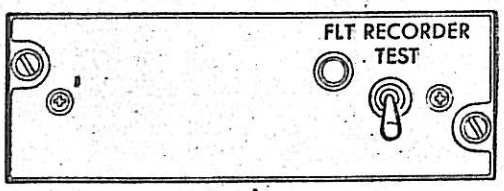

PILOTS' OVERHEAD SWITCH PANEL

30 02 31 047

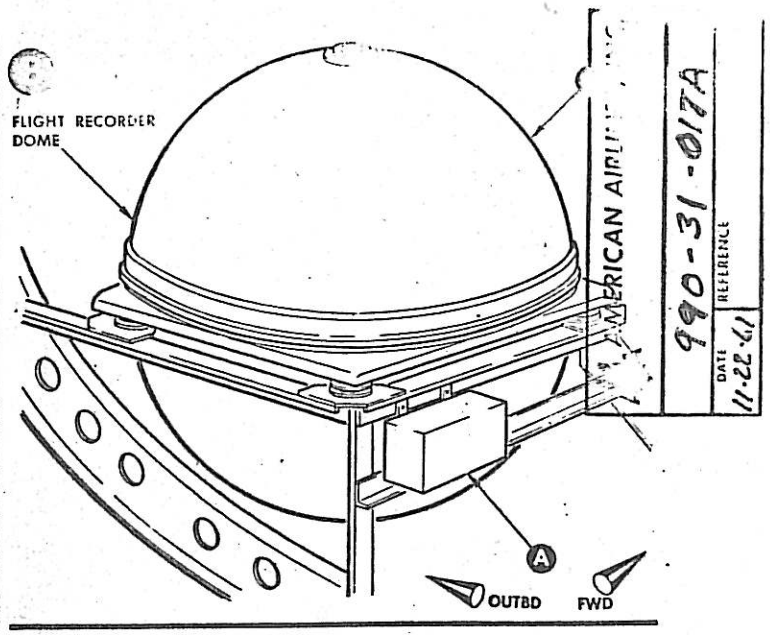

AMERICAN AIRLINES
990-31-017A
DATE 11-22-41
REFERENCE

C

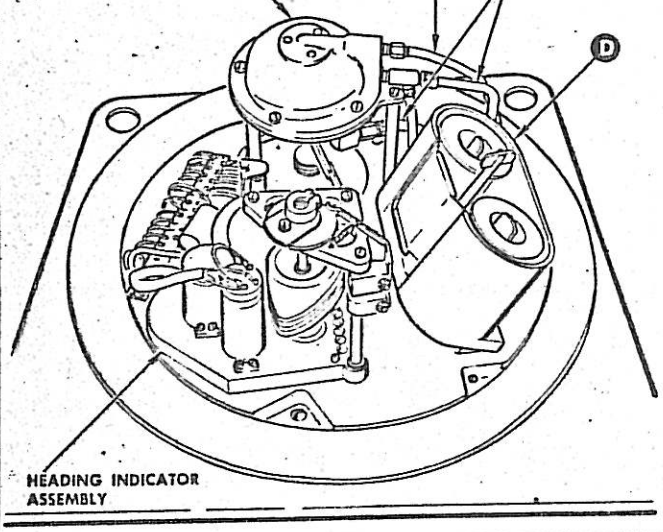

D

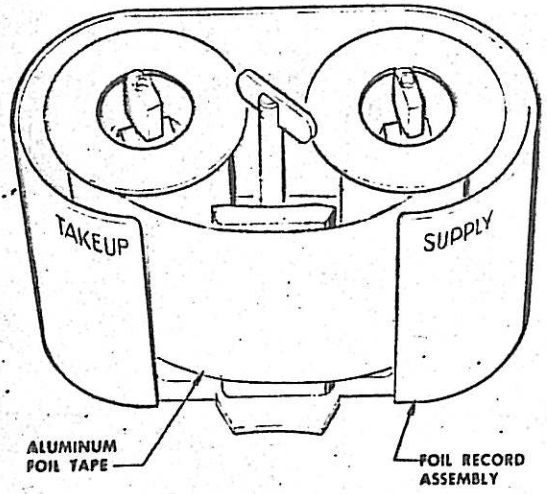

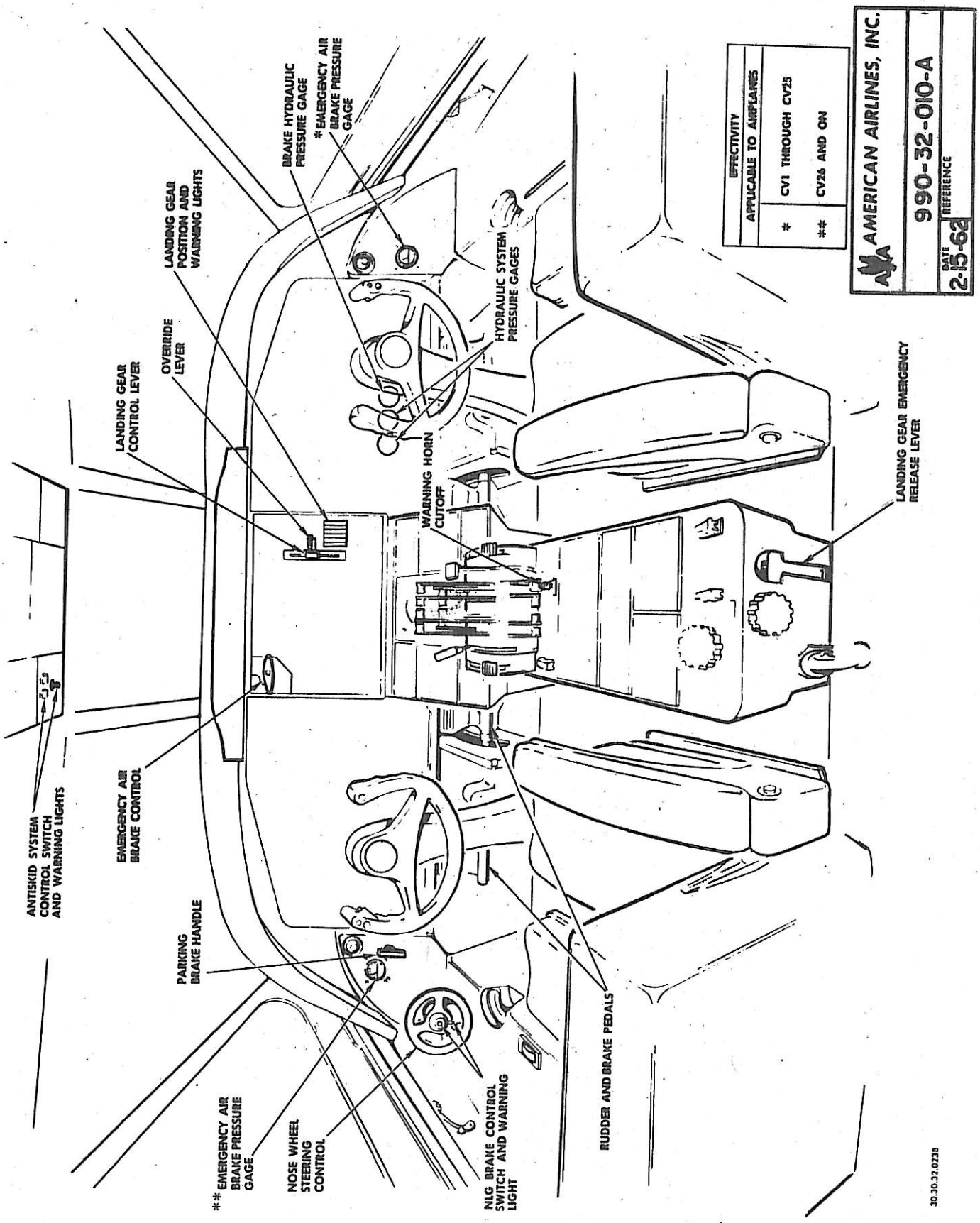

Landing Gear System Controls - Flight Compartment
Figure 2

AMERICAN AIRLINES, INC.
330-32-041
DATE
REFERENCE

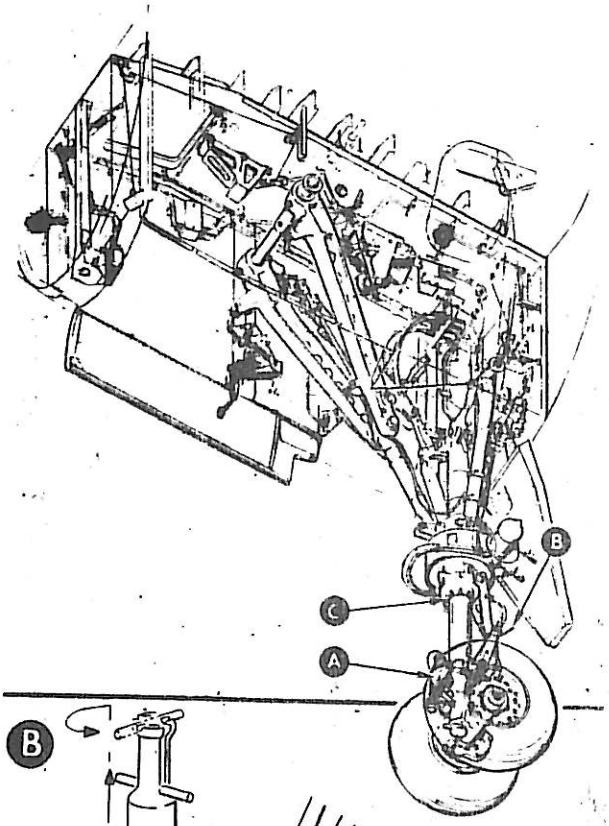

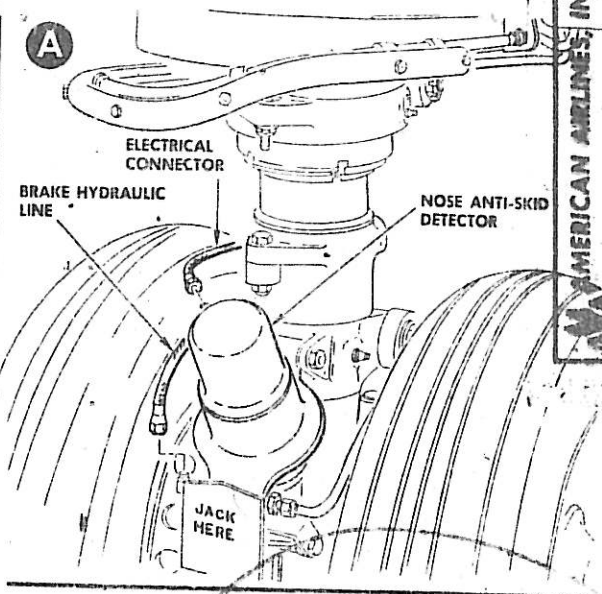

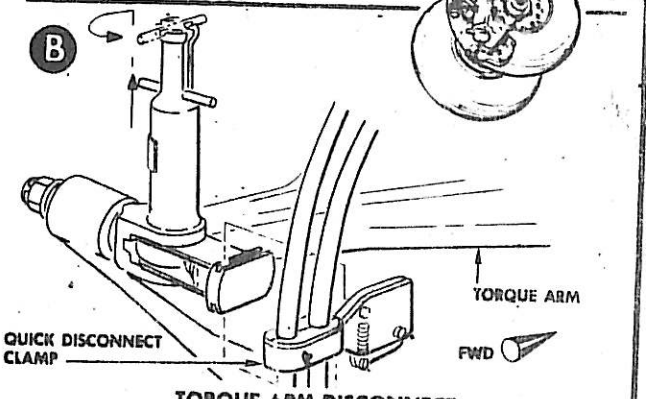

TORQUE ARM DISCONNECT

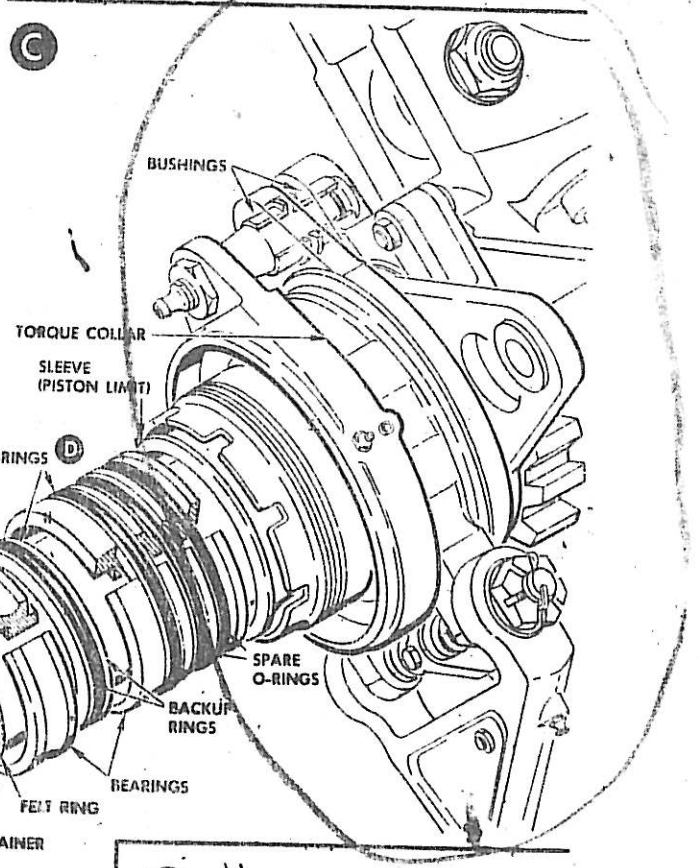

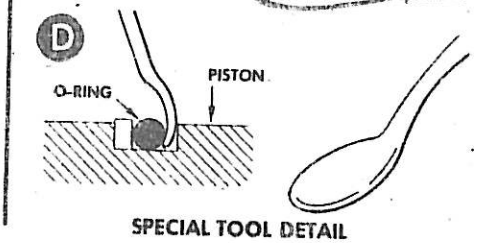

SPECIAL TOOL DETAIL

11.01
25

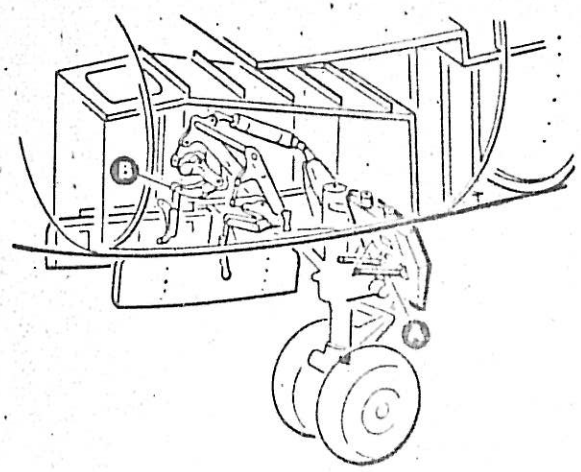

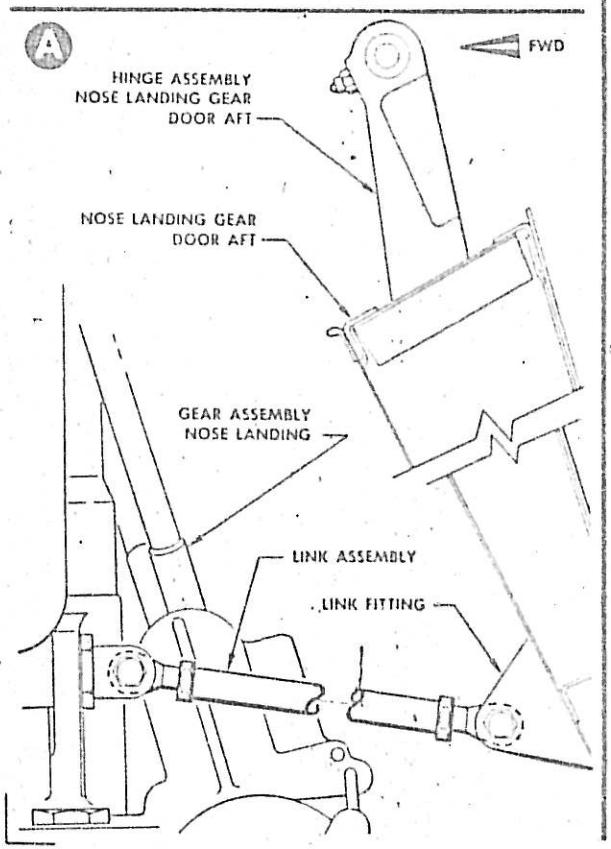

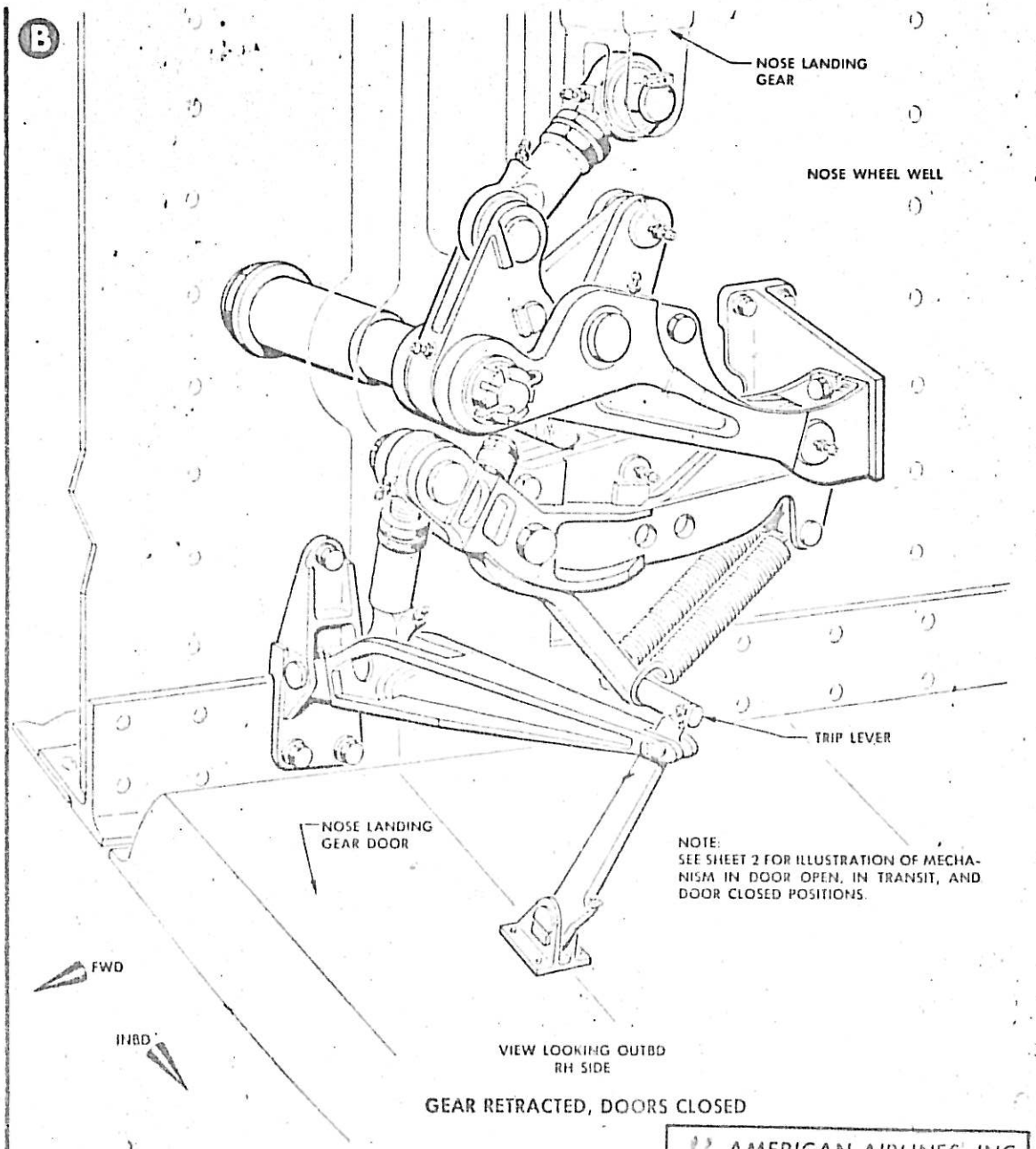

NOTE:
SEE SHEET 2 FOR ILLUSTRATION OF MECHANISM IN DOOR OPEN, IN TRANSIT, AND DOOR CLOSED POSITIONS.

GEAR RETRACTED, DOORS CLOSED

NOSE LANDING GEAR DOORS

AMERICAN AIRLINES, INC.

990-32-048

DATE	REFERENCE
9-22-60	32.31.32.008-1

30.02.32.088

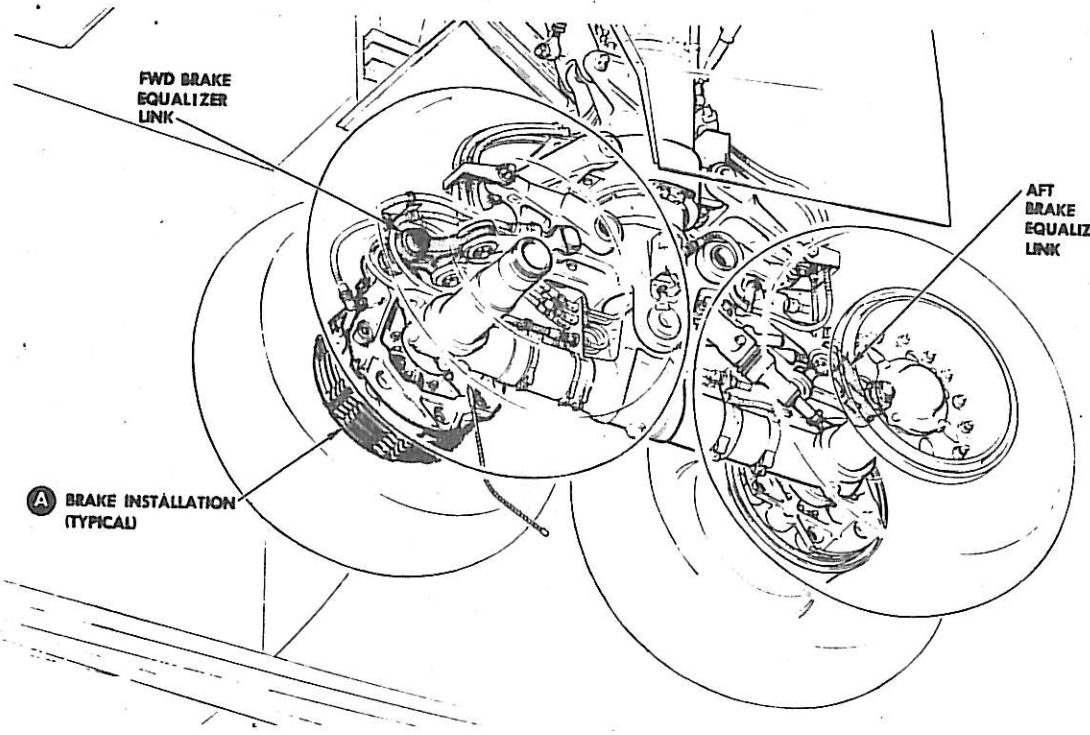

AMERICAN AIRLINES, INC.
990-32-126
DATE 11-22-61
REFERENCE

A

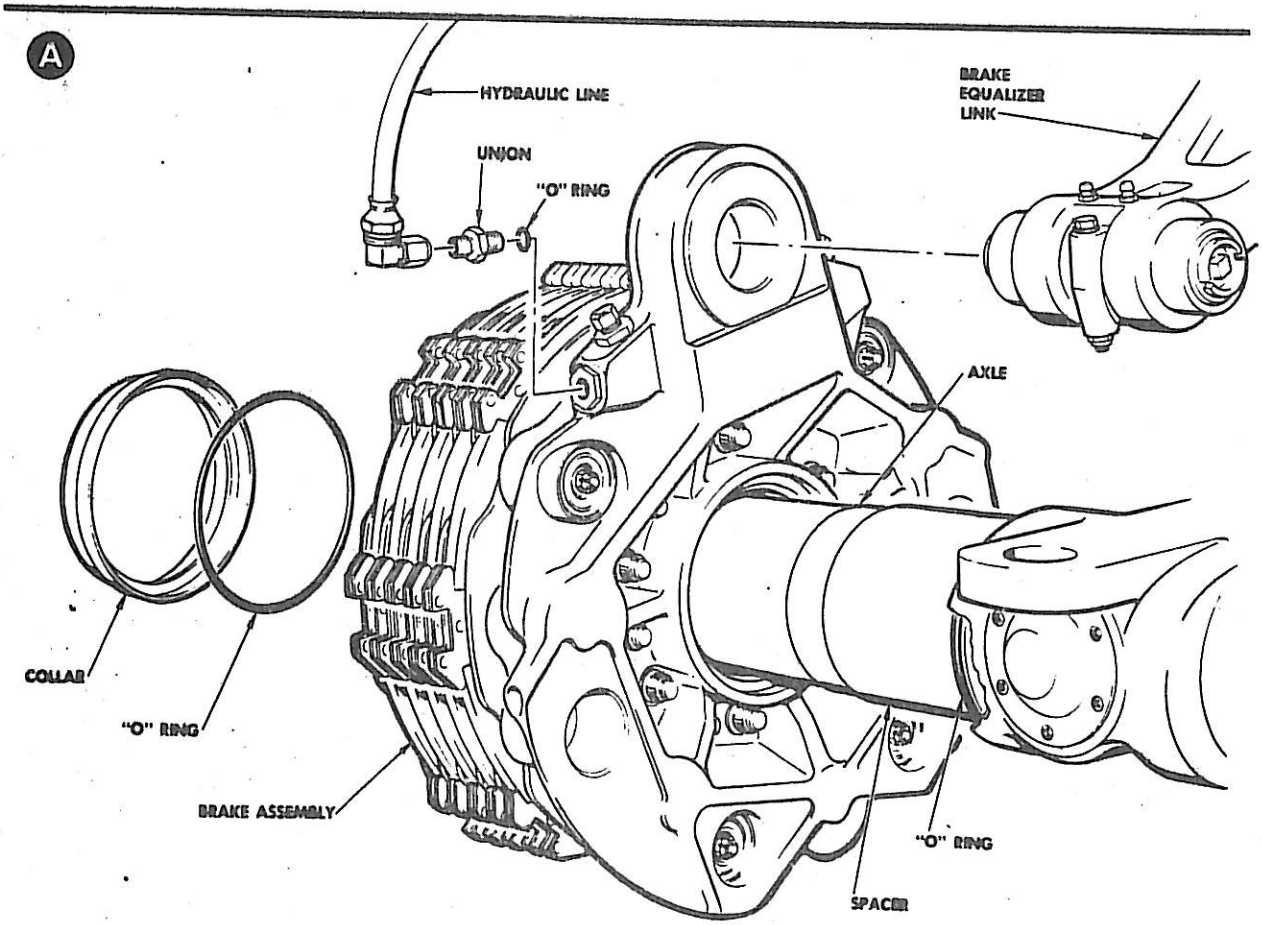

30.02.32.088

AMERICAN AIRLINES, INC.
990-32-127
DATE 11-27-61 REFERENCE

30.02.32.089-2

C

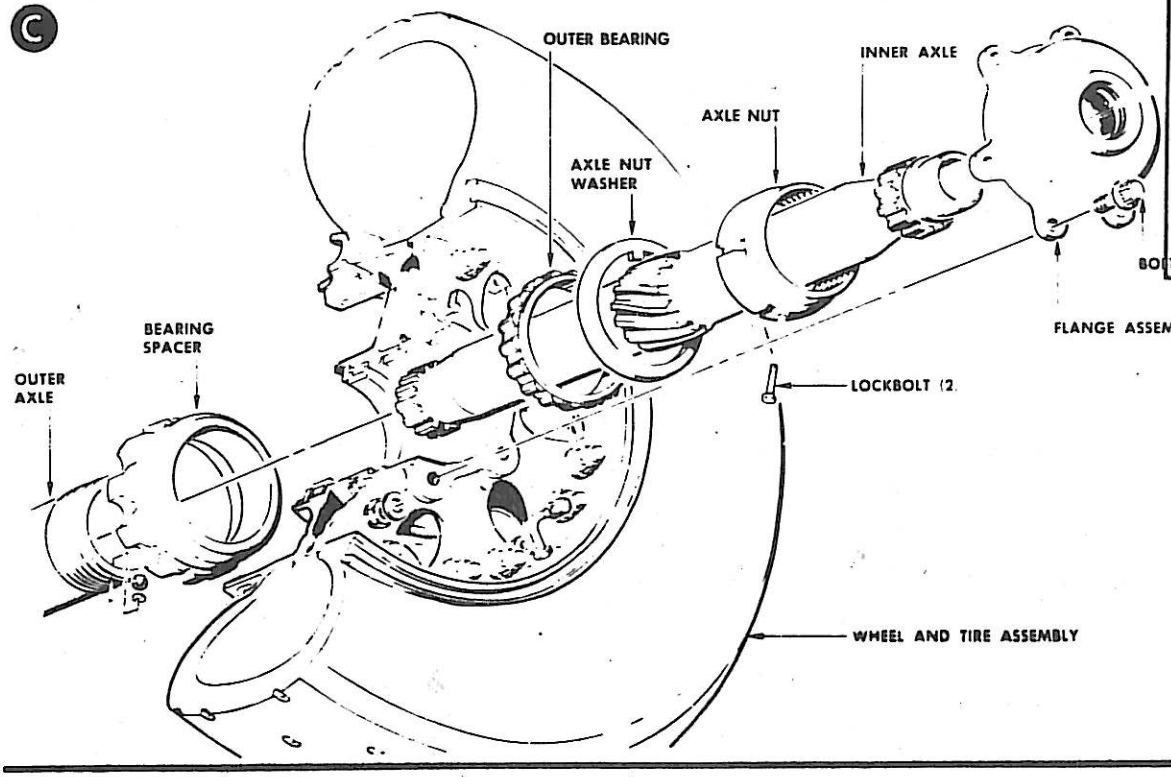

D

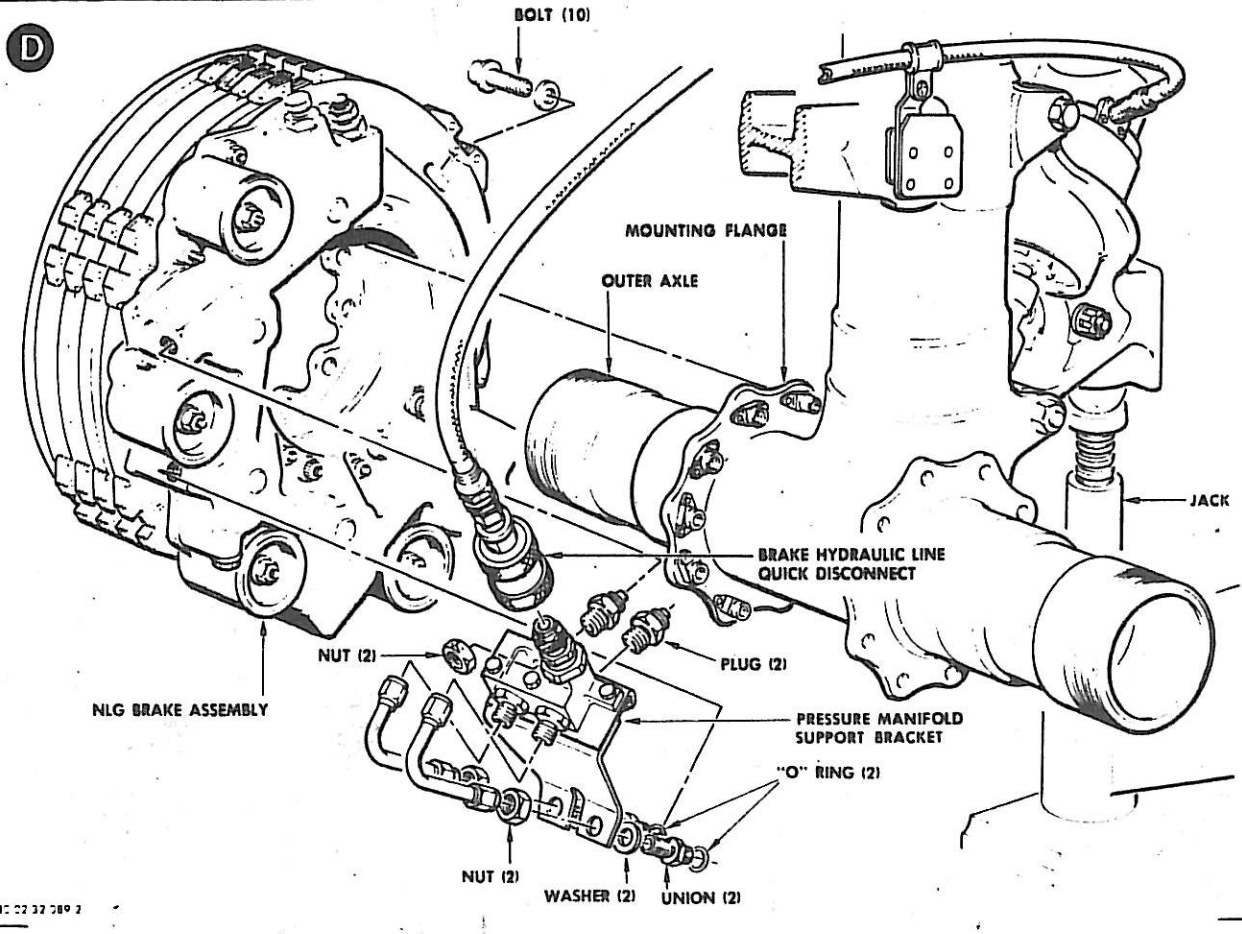

30.02.32.089-2

30.02.32.142

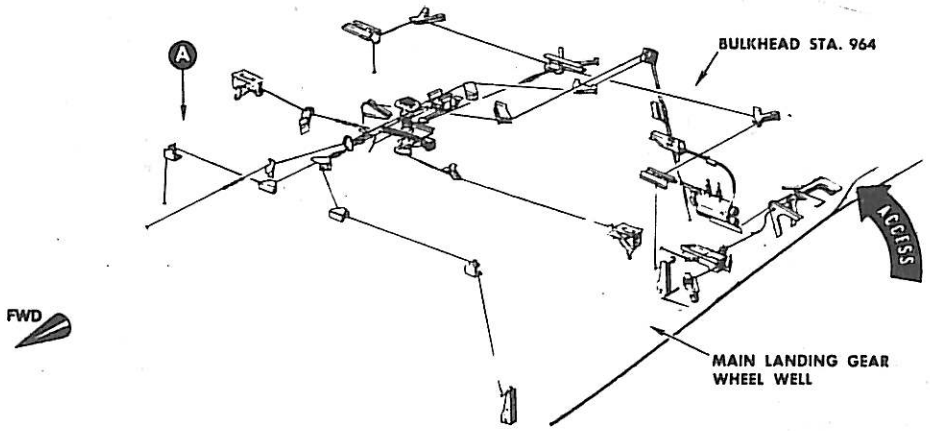

AMERICAN AIRLINES, INC.
990-32-128
DATE 11-22-62
REFERENCE

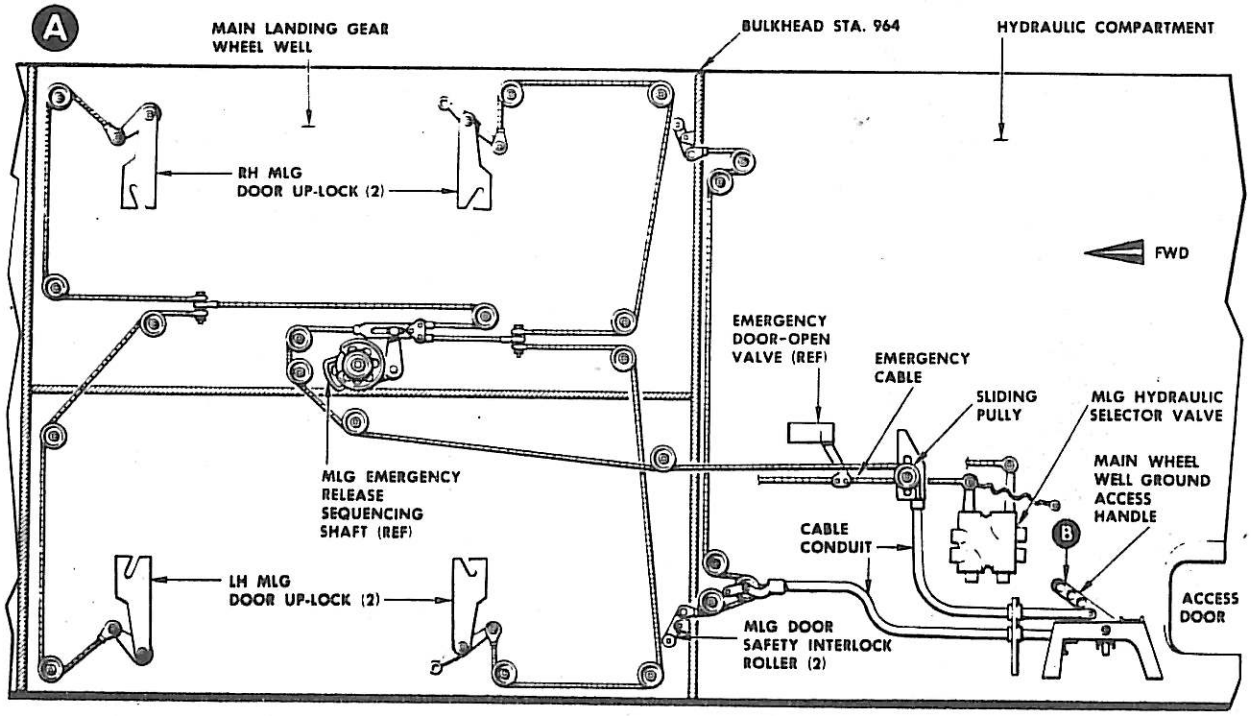

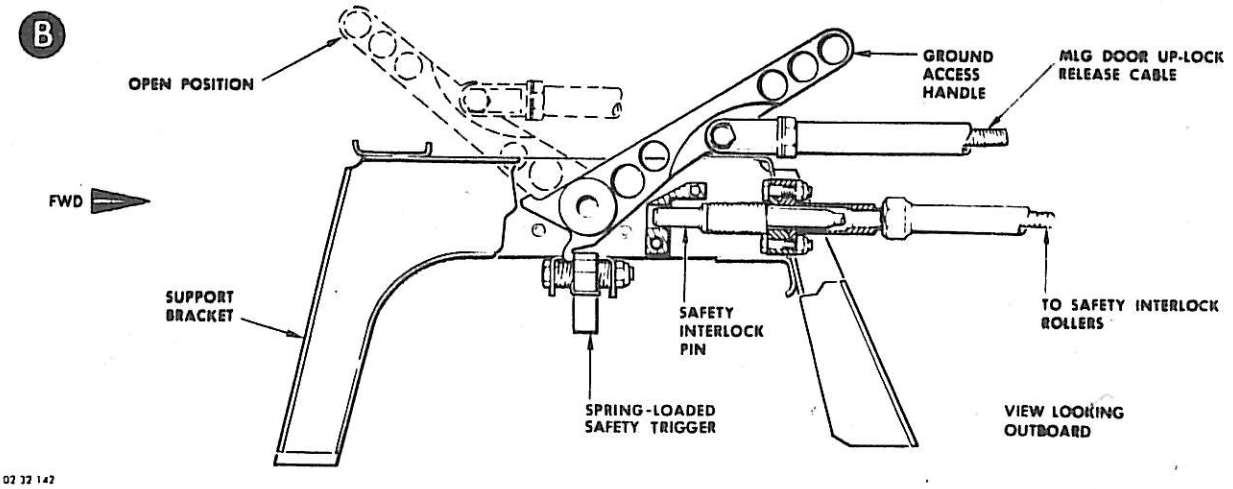

22 02 32 142

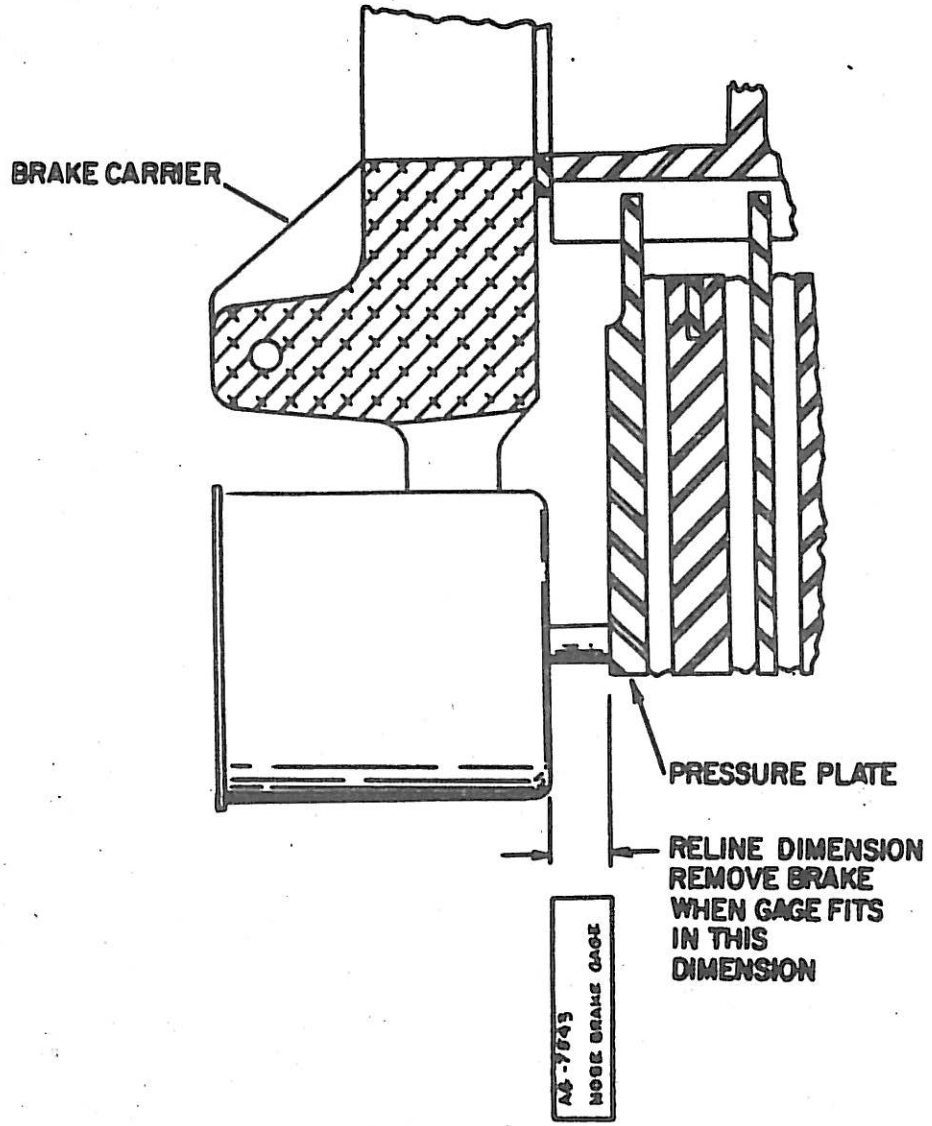

NOSE GEAR BRAKE WEAR GAGE USE

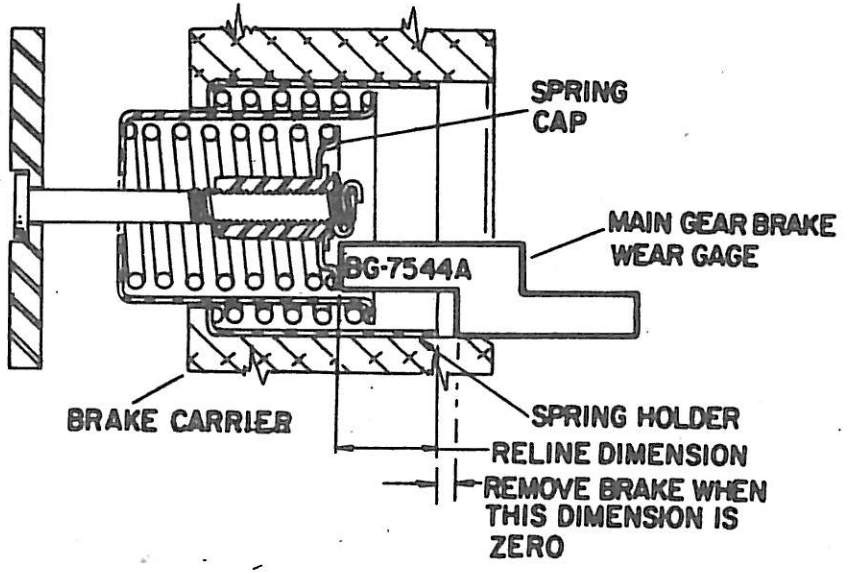

MAIN GEAR BRAKE WEAR GAGE USE

AMERICAN AIRLINES, INC.

990-32-135

DATE 9-29-64

REFERENCE

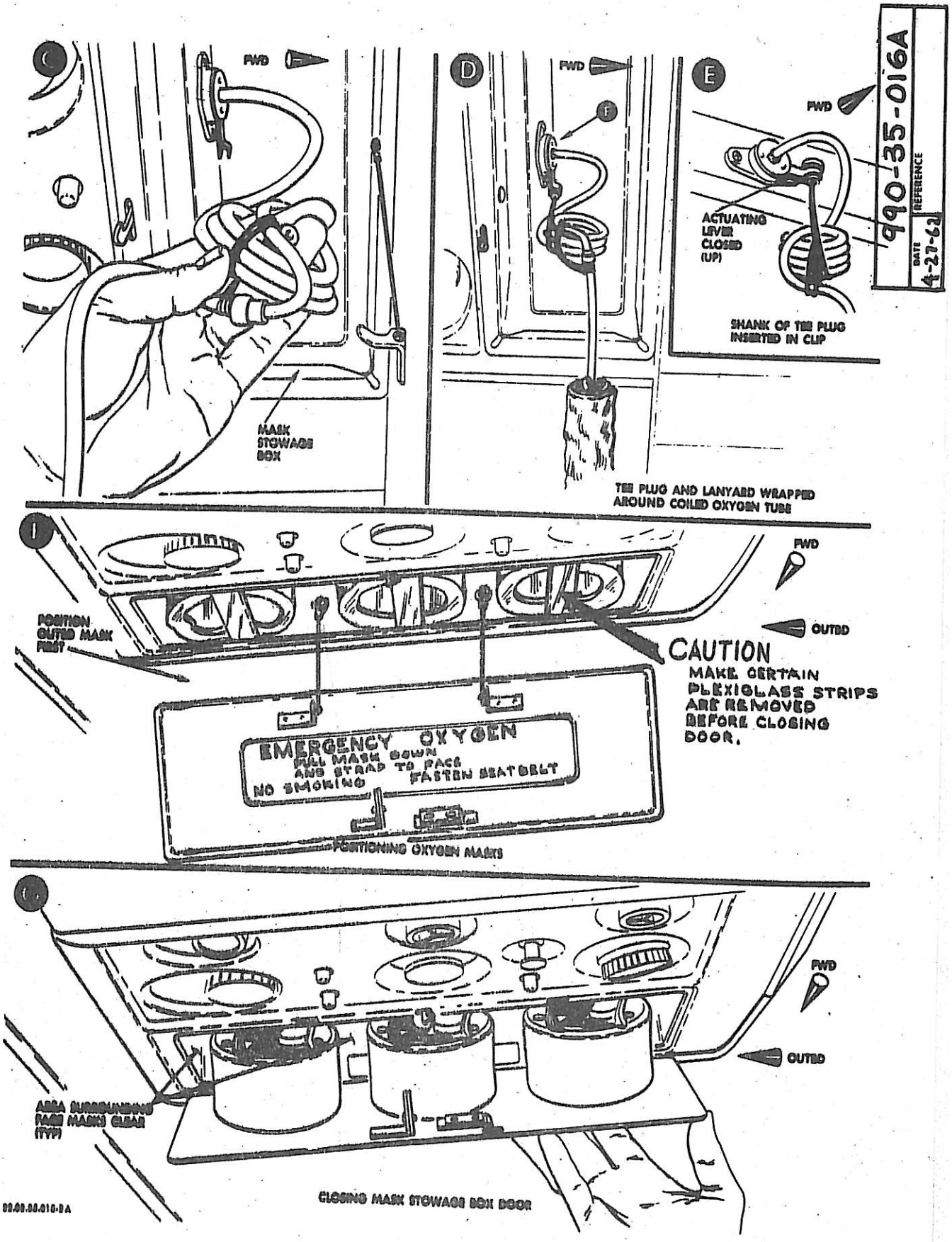

Passenger Oxygen Mask Stowage

30.30.52.003

AMERICAN AIRLINES, INC.

990-52-014

DATE 9-12-60 | REFERENCE 30-30-52-003

A

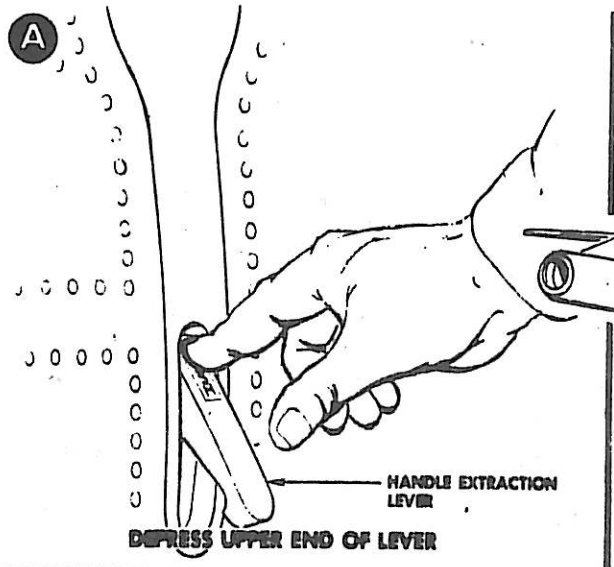

DEPRESS UPPER END OF LEVER

NOTE:
FORWARD MAIN ENTRANCE DOOR SHOWN AS TYPICAL FOR BOTH THE MAIN ENTRANCE AND SERVICE DOORS.

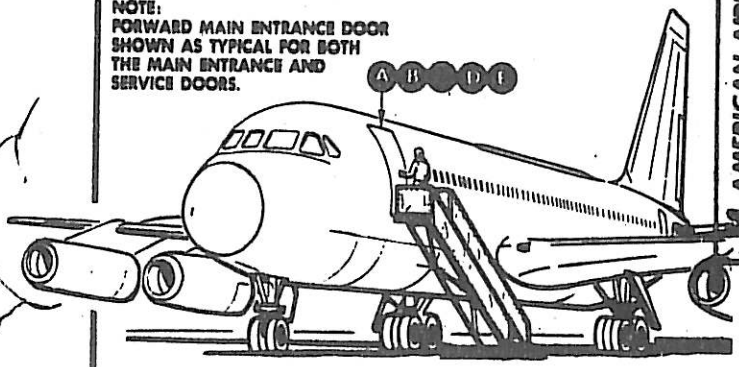

B

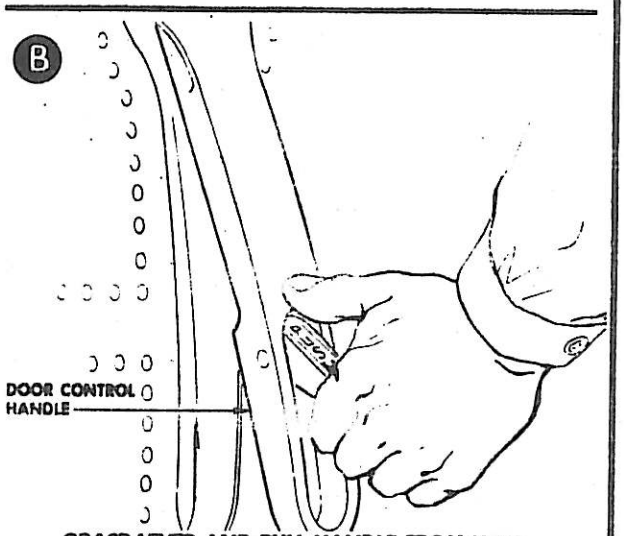

GRASP LEVER AND PULL HANDLE FROM WELL

D

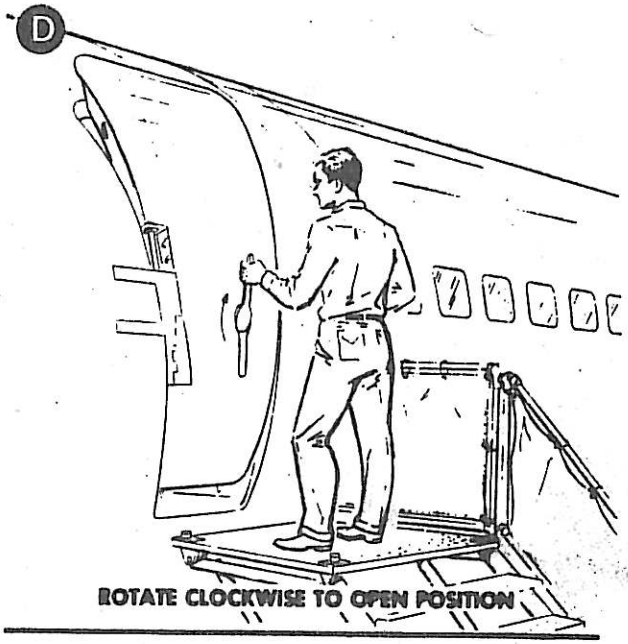

ROTATE CLOCKWISE TO OPEN POSITION

C

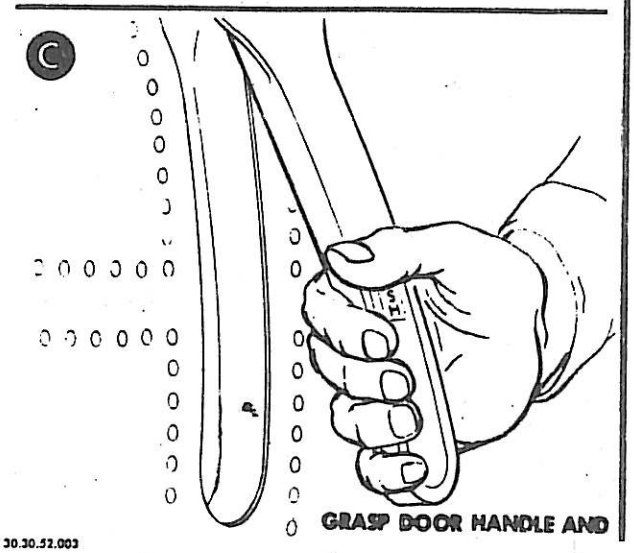

GRASP DOOR HANDLE AND

E

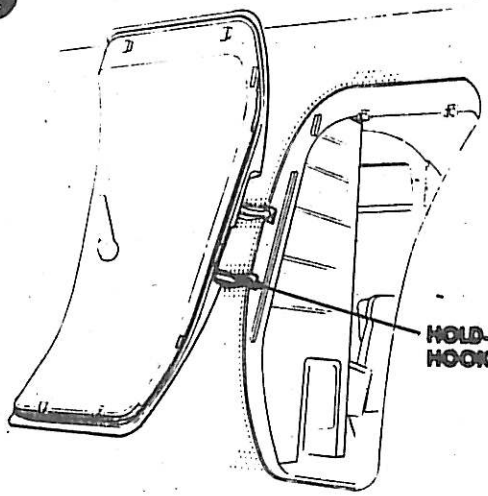

SWING DOOR TO FULL OPEN POSITION AND SECURE WITH HOLD-OPEN HOOK

AMERICAN AIRLIN
990-52-015
DATE 9-12-60
REFERENCE 30-30-51

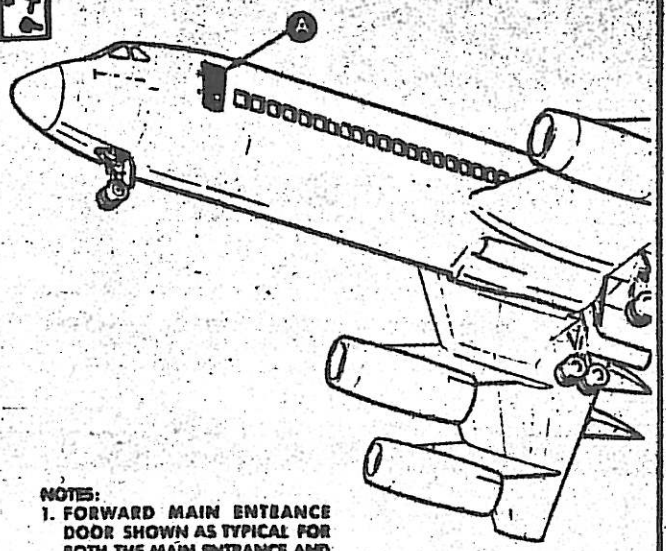

NOTES:
1. FORWARD MAIN ENTRANCE DOOR SHOWN AS TYPICAL FOR BOTH THE MAIN ENTRANCE AND SERVICE DOORS.
2. THE MAIN ENTRANCE DOORS HAVE INTERIOR ASSIST HANDLES, THE SERVICE DOORS DO NOT.

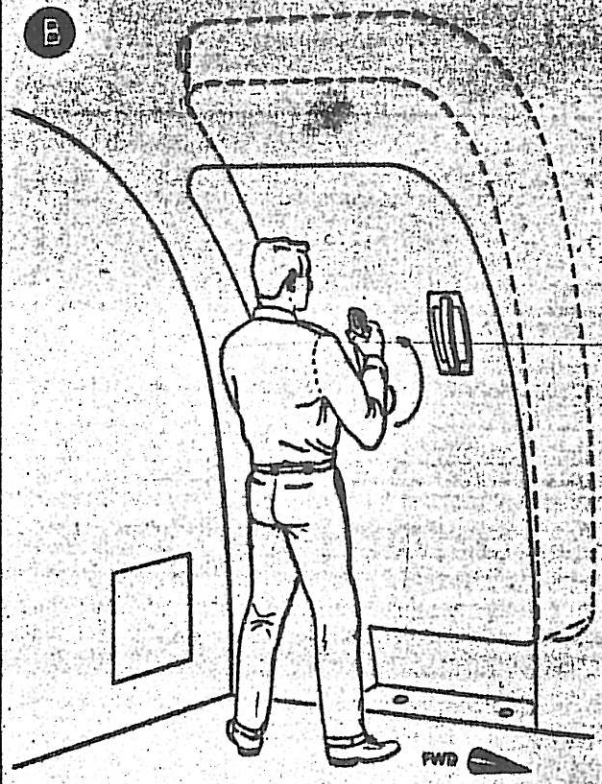

GRASP INTERIOR DOOR HANDLE AND ROTATE COUNTER CLOCKWISE TO OPEN POSITION.

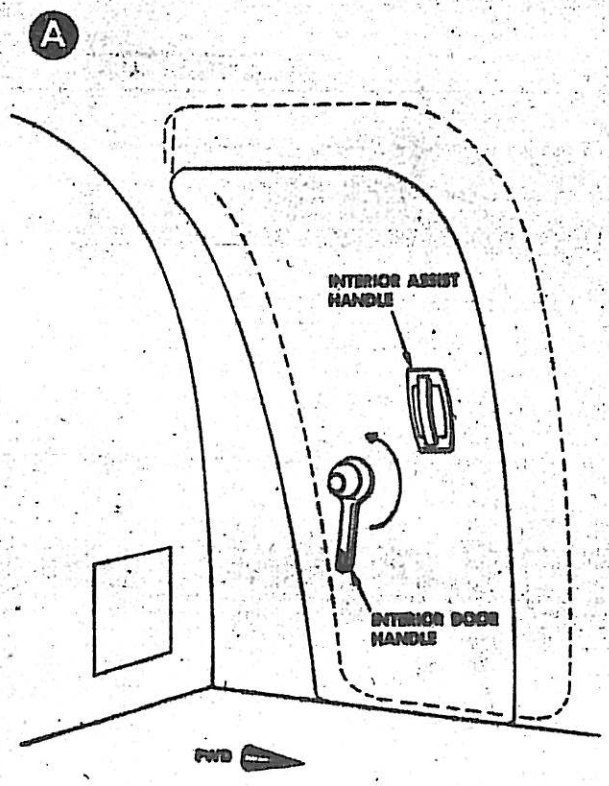

INTERIOR DOOR HANDLE POINTS DOWNWARD WHEN DOOR IS CLOSED AND LOCKED. TO OPEN—

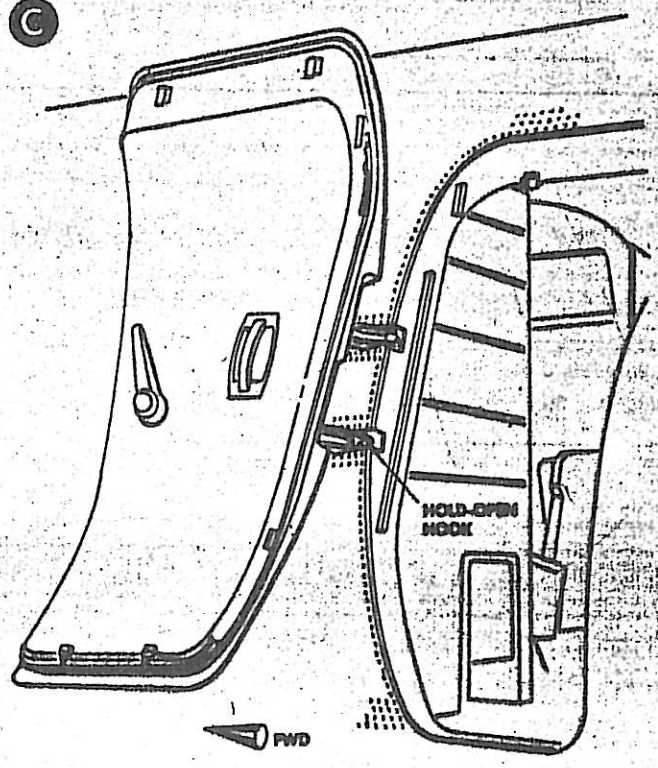

SWING DOOR OUTWARD AND FORWARD UNTIL SECURED BY HOLD-OPEN HOOK.

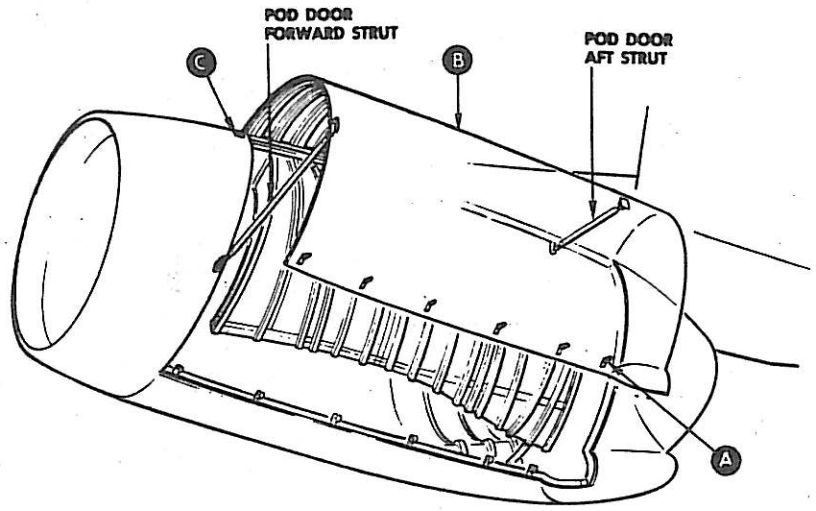

B

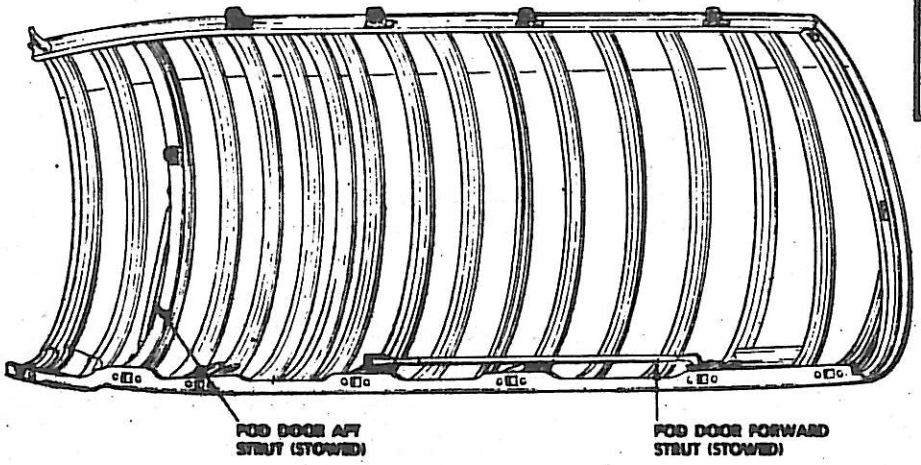

POD DOOR—TYPICAL

A

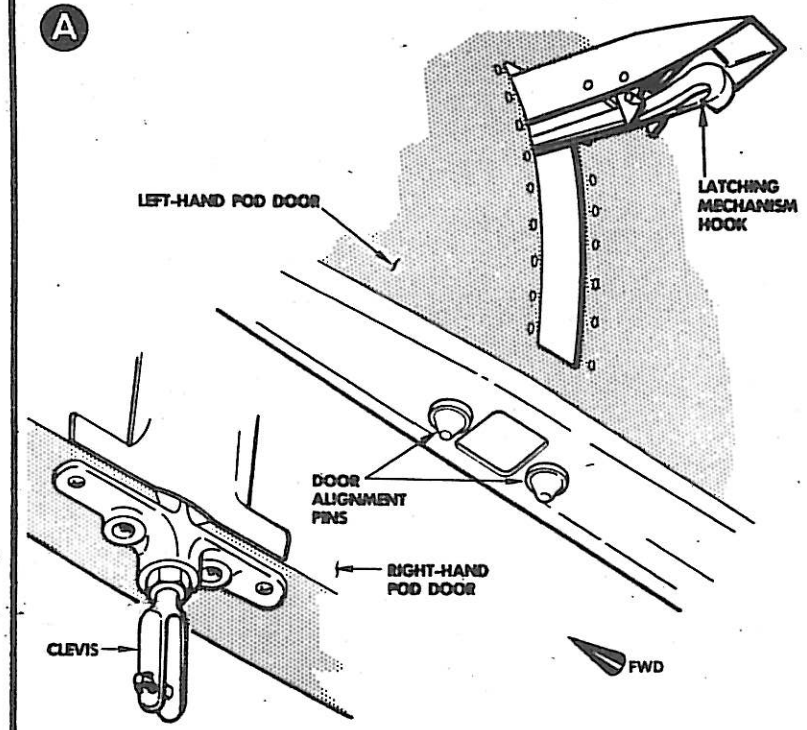

TENSION-TYPE DOOR LATCHING MECHANISM—TYPICAL

C

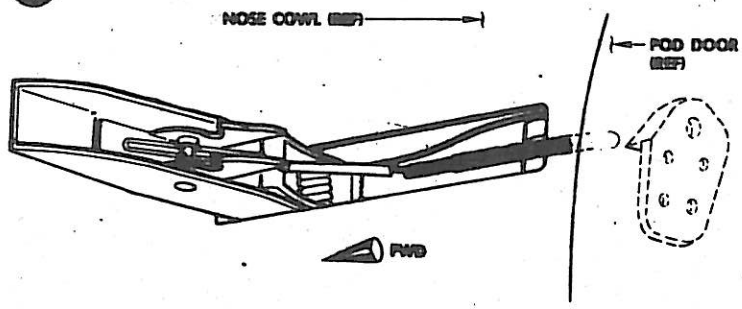

SHEAR-TYPE DOOR LATCHING MECHANISM—TYPICAL

990-54-006

DATE 9-12-60 REFERENCE

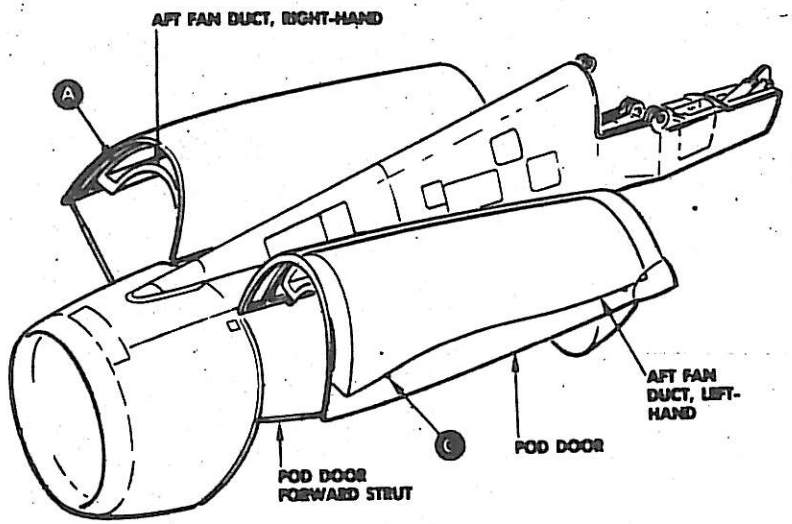

AFT FAN DUCTS OPEN—SECURED TO POD DOORS

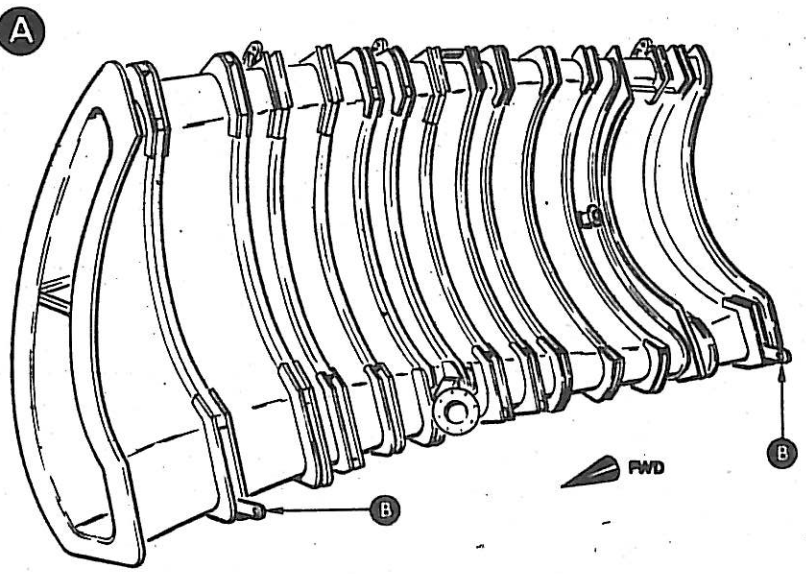

AFT FAN DUCT—TYPICAL

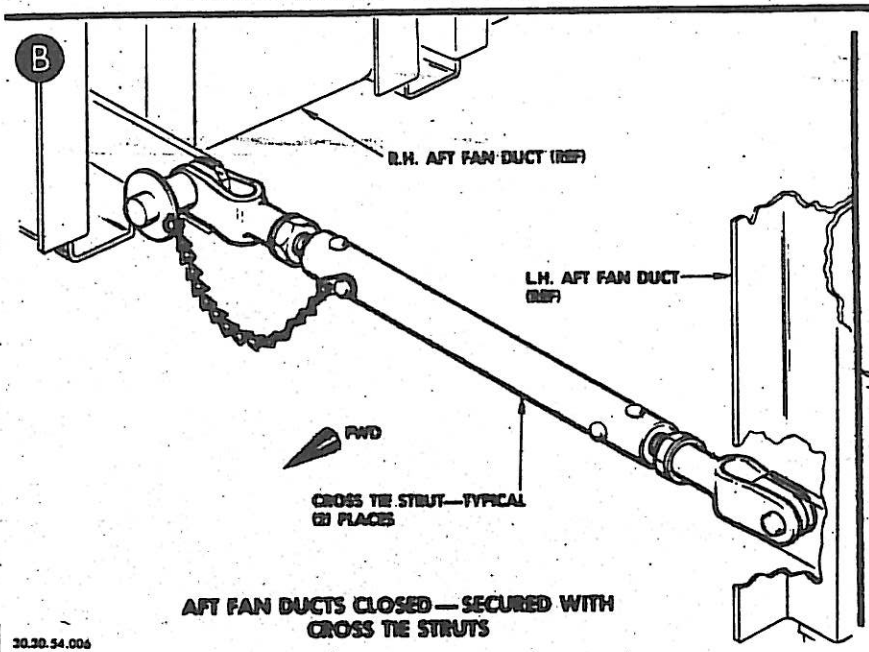

AFT FAN DUCTS CLOSED—SECURED WITH CROSS TIE STRUTS

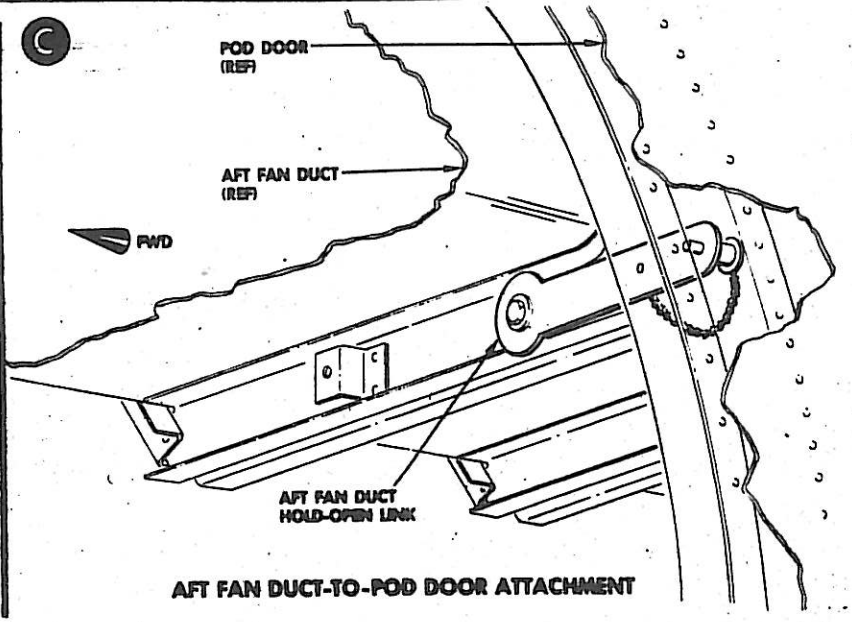

AFT FAN DUCT-TO-POD DOOR ATTACHMENT

AMERICAN AIRLINES, INC.

990-54-007

DATE | REFERENCE

AMERICAN AIRLINES, INC.
990-71-003
DATE 3-15-60

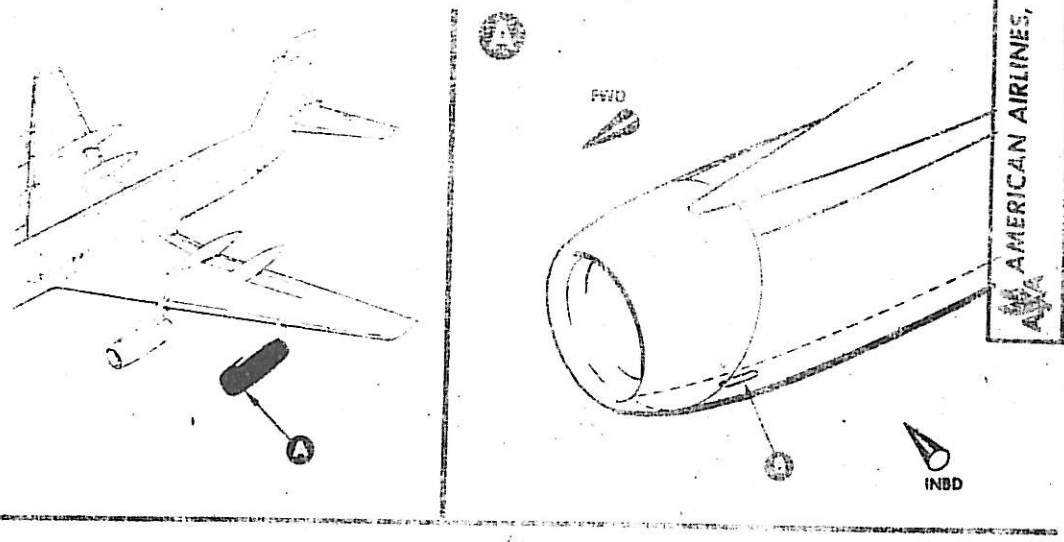

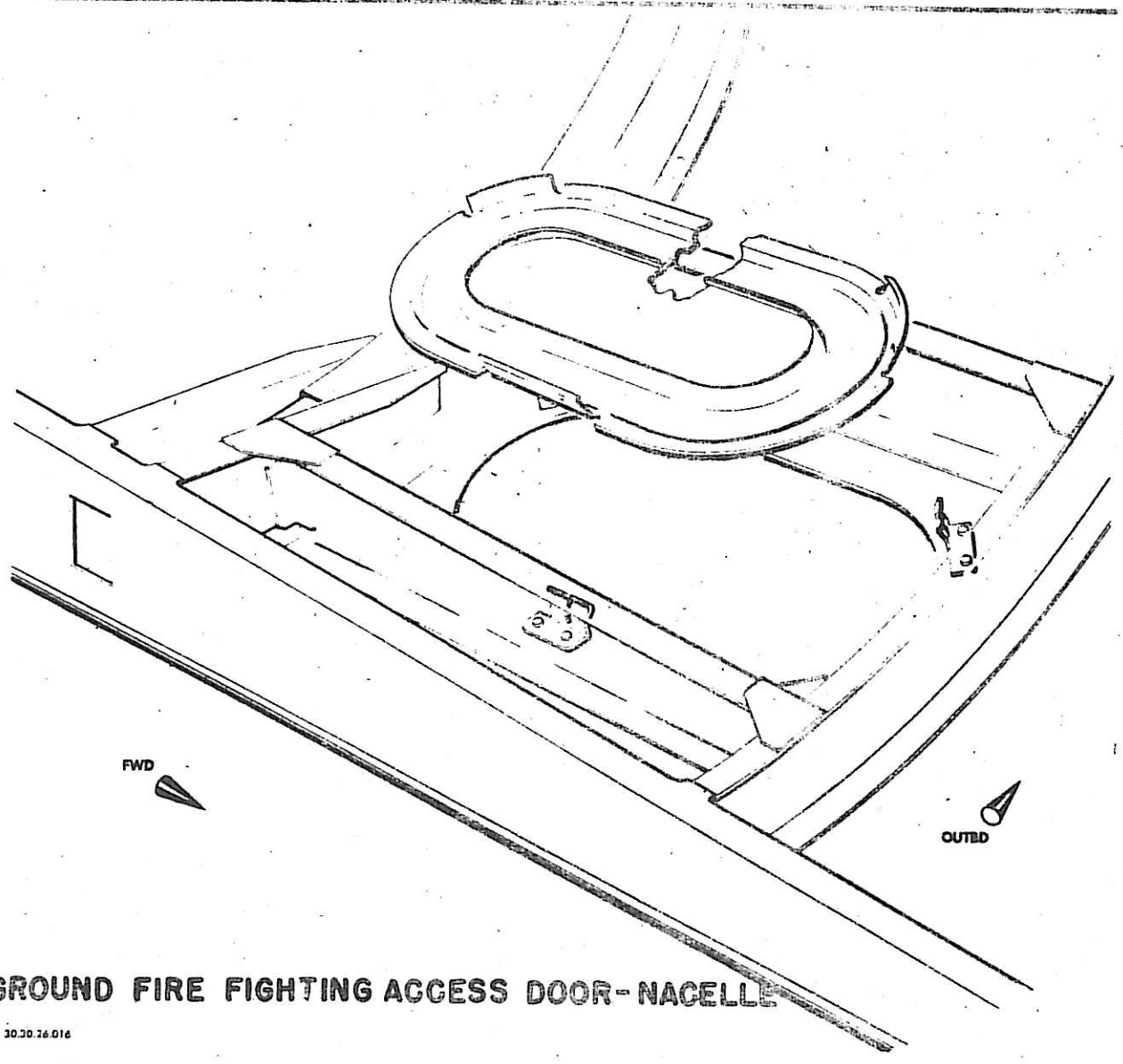

GROUND FIRE FIGHTING ACCESS DOOR - NACELLE

30.30.26.016